HONDA
POWER PRODUCTS

GENERAL PURPOSE ENGINE

GP160H
GP200H

PARTS CATALOGUE

3

13ZDKE03

© Honda Motor Co., Ltd. 2014

GP160H

FOREWORD INDEX 1

ENGINE GROUP 2

PART NUMBER INDEX 3

PART NAME INDEX 4

Instruction for use of parts catalogue

- **This parts catalogue was prepared based on the latest information available as of July 10, 2014.**
  - See the parts catalogue news for any revision that is made after July 10, 2014.
- **Always specify the part number when ordering a part.**
  - Check the model, type, serial numbers, color, maker, and the size as needed before ordering a part.
  - Note that the illustrations (part drawings) can differ from the actual parts in shape.
    They are given just to help you to refer to the parts.
- **When modifications or additions to this parts catalogue are made, a revised edition will be issued at an appropriate time, with successively progressing revision numbers on the cover. We recommend obtaining such revisions in order to keep your parts catalogue up-to-date at all times. To check whether a parts catalogue revision has been issued, please contact your Honda distributor.**

Initial version issue date November 20, 2013
Honda Motor Co., Ltd.

CONTENTS

	Page	Address No.	
Instruction for use of parts catalogue	1	B 1	1
How to refer to the part information	2	B 2	
Part catalogue structure	3	B 3	
When the parts were revised	4	B 4	
Abbreviations used in the parts catalogue	4	B 4	
How to check the part block and serial numbers	5	B 5	
Models, parts catalogue codes and applicable serial numbers	6	B 6	
Features of each type	8	B 8	
Fuel hose, general purpose hoses and vinyl hose	12	B12	
FLAT RATE SERVICE TIME	13	B13	
Illustrated index	18	C 2	
ENGINE GROUP	21	D 1	2
PART NO. INDEX	48	F 1	3
PART NAME INDEX	50	G 1	4

How to refer to the part information

Ⓐ Reference with “Illustrated index”

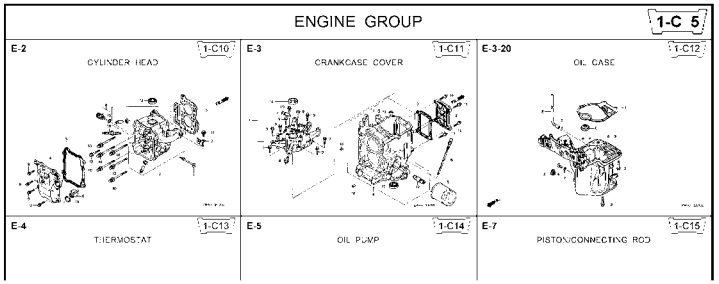

Ⓑ Reference with “Part number index”

PART NO. INDEX

Part Number	Address	Page	Ref.
06000			
06316-ZW9-000	1-G9	88	1
11000			
11300-ZW9-405	1-C11	27	1
11300-ZW9-406	1-C11	27	1
11340-ZW9-000	1-C11	27	2
11342-ZW9-000	1-C11	27	3
11381-ZW9-003	1-C12	28	1
12000			
12000-ZW9-405ZA	1-C11	27	4
12155-ZV4-A00	1-C13	29	1
12166-ZW9-000	1-C10	26	1
12209-GB4-681	1-C16	32	1
12210-ZW9-405ZA	1-C10	26	2
12216-ZE2-300	1-E8	55	1
	1-E11	58	1
15212-ZW9-000	1-C14	30	
15220-ZW9-003	1-C14	30	
15332-ZW9-000	1-E8	55	
15332-ZW9-A30	1-E11	58	
15400-PFB-004	1-C11	27	
15422-ZW9-000	1-C14	30	
15473-881-000	1-C14	30	
15474-ZW9-000	1-C14	30	
15611-921-000	1-C10	26	
15655-ZW9-000	1-C11	27	
16000			
16010-ZV4-005	1-D4	36	
16011-ZV4-005	1-D4	36	
16013-ZW9-003	1-D4	36	
16016-ZW9-003	1-D4	36	
16016-ZW9-721	1-D4	36	
16023-ZW9-003	1-D4	36	
16024-ZV4-650	1-D4	36	
16028-ZV4-650	1-D4	36	

Ⓒ Reference with “Part name index”

PART NAME INDEX

Part name	Address	Page	Ref.	
[A]				BOLT ,
ABSORBER ,FUEL	1-E15	62	5	
ARMATURE COMP.	1-D11	43	7	BOLT ,
ARM COMP. ,LINK JOINT	1-G6	85	18	BOLT ,
ARM COMP. ,SHIFT LINK	1-G6	85	14	BOLT ,
ARM COMP. ,TILT	1-F15	79	20	
ARM ,FUEL PUMP ROCKER	1-C16	32	4	
ARM ,REVERSE LOCK	1-F15	79	18	
ARM ,SHIFT LINK	1-F11	74	7	
ARM ,STOPPER	1-D1	33	12	BOLT ,
ARM ,THROTTLE REMOTE	1-F11	74	6	
ARM ,VALVE ROCKER	1-C16	32	3	
[B]				
BAG ,TOOL ,160MM	1-G5	84	10	
BAND	1-G6	86	37	
BAND B1,WIRE	1-F6	69	1	
BAND ,CORD	1-F3	67	18	BOLT ,
BAND ,TUBE CLIP ,11MM	1-E15	63	20	
BAND ,TUBE CLIP ,12.5MM	1-E15	63	19	BOLT ,

Address No.

E-2 CYLINDER HEAD 1-C10

Block No.

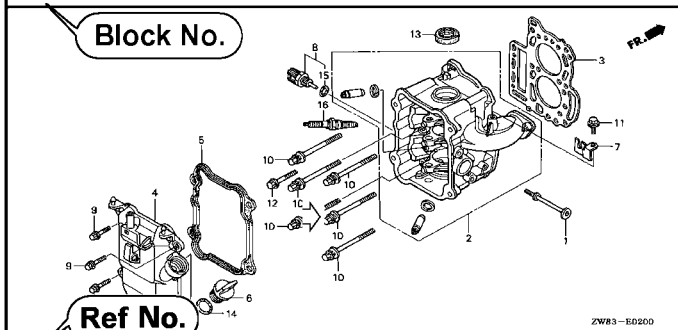

Ref No.

Service item	F.R.T.
O-RING, 26X2.7	0.1
.PLUG, SPARK	
O-RING, 9.5X1.5	0.2
.SENSOR ASSY., WATER TEMPERATURE	
COVER COMP., HEAD	0.3
.PACKING, HEAD COVER	
GASKET, CYLINDER HEAD	1.8
OIL SEAL, 20X32X6	2.4
HEAD COMP., CYLINDER	3.1

Ref. No.	Part No.	Description	Reqd. QTY BF 9.9D1	BFP 9.9D1	BF 10D1	BFP 10D1	BF 10B1	BFP 10B1	Serial No.	Parts catalogue code
1	12166-ZW9-000	STOPPER, ENGINE SIDE	2	2	2	2	2	2		
2	12210-ZW9-000ZA	HEAD COMP., CYLINDER *NH8*.....DARK GRAY	1	1	1	1	1	1		
3	12251-ZW9-003	GASKET, CYLINDER HEAD	1	1	1	1	1	1		
4	12310-ZW9-000	COVER COMP., HEAD	1	1	1	1	1	1		
5	12312-ZW9-000	PACKING, HEAD COVER	1	1	1	1	1	1		
6	15611-921-000	CAP, OIL (NO GAUGE)	1	1	1	1	1	1		
7	16617-ZW9-000	HOLDER, CABLE	1	1	1	1	1	1	-------- --------	SC,SG
	16617-ZW9-010		1	1	1	1	1	1	-------- 1001800	LHC,LHD
			1	1	1	1	1	1	1001801 --------	LHC,LHD
8	35673-ZW5-003	SENSOR ASSY., WATER TEMPERATURE	1	1	1	1	1	1		
9	90003-ZW9-000	BOLT, FLANGE, 6X22	4	4	4	4	4	4		
10	90007-ZW9-003	BOLT, FLANGE, 8X83	6	6	6	6	6	6		
11	90011-ZW9-000	BOLT, FLANGE, 6X14(CT200)	1	1	1	1	1	1		
12	90020-ZW9-000	BOLT, FLANGE, 8X40	2	2	2	2	2	2		
13	91202-KJ9-003	OIL SEAL, 20X32X6	1	1	1	1	1	1		
14	91301-805-000	O-RING, 26X2.7	1	1	1	1	1	1		
15	91307-PK2-005	O-RING, 9.5X1.5(HONDA KIKAKI)	1	1	1	1	1	1		
16	98059-55916	PLUG, SPARK (CR5EH-9)	2	2	2	2	2	2		
	98059-55926	PLUG, SPARK (U16FER9)	2	2	2	2	2	2		

44

2000.09.20 E

Page No.

Part catalogue structure

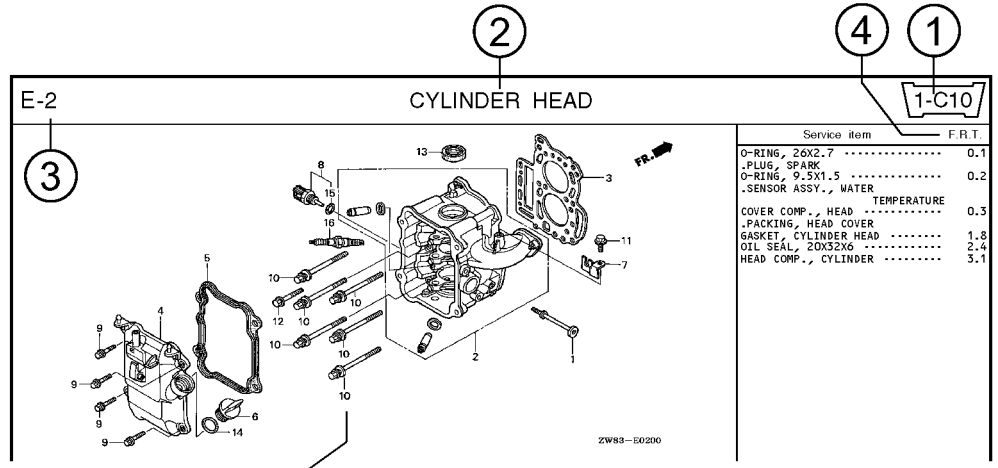

Ref. No.	Part No.	Description	Reqd. QTY BF 9.9D1	BFP 9.9D1	BF 10D1	BFP 10D1	BF 10B1	BFP 10B1	Serial No.	Parts catalogue code
1	12166-ZW9-000	STOPPER, ENGINE SIDE	2	2	2	2	2	2		
2	12210-ZW9-000ZA	HEAD COMP., CYLINDER								
		NH8.....DARK GRAY	1	1	1	1	1	1		
3	12251-ZW9-003	GASKET, CYLINDER HEAD	1	1	1	1	1	1		
4	12310-ZW9-000	COVER COMP., HEAD	1	1	1	1	1	1		
5	12312-ZW9-000	PACKING, HEAD COVER	1	1	1	1	1	1		
6	15611-921-000	CAP, OIL ..... (NO GAUGE)	1	1	1	1	1	1		
7	16617-ZW9-000	HOLDER, CABLE	1	1	1	1	1	1	------- -------	SC,SG
	16617-ZW9-010	.....	1	1	1	1	1	1	------- 1001800	LHC,LHD

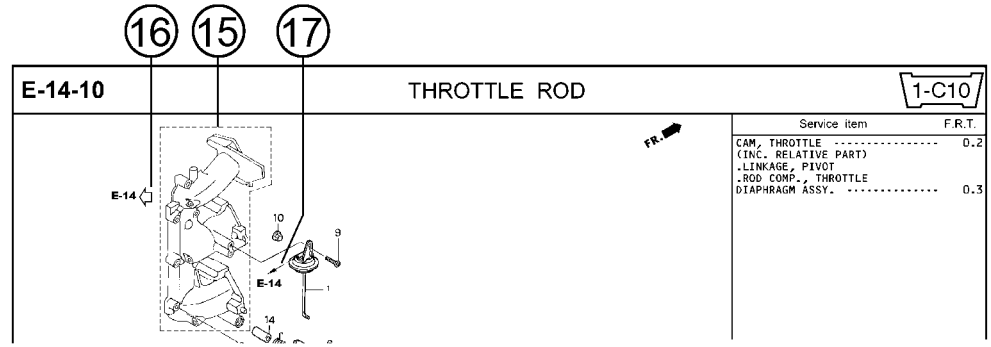

① Address number
- Address No. is provided (in place of the page No.) to help you refer to the part with the part No. or part name.

② Block title ③ Block number

④ Service item/Flat rate time

⑤ Reference number
- Title number marked with the parenthesis or parentheses indicates that it continues from the previous page.

⑥ Part number ⑦ Honda color code

⑧ Description

⑨ Assemblies
- Sections framed with broken lines in the exploded view drawings are available as complete assemblies. (Their individual parts can also be obtained.)

⑩ Color description

⑪ Note
- Notes are shown with the parentheses in the part name column.

⑫ Required quantity
- Required QTY shown in the parenthesis or parentheses indicates the optional part.
- Required QTY marked with “N” Indicates the optional part that should be selected as needed.
- Required QTY indicates the number of the part used in the block.

⑬ Serial number

⑭ Type
- When the type column is blank, it indicates that the part is applicable to all types.
- As the type of the actual unit may differ from the “parts catalogue, type” please refer to “Models, types and applicable serial numbers” for confirmation.

⑮
- Parts enclosed within a dotted line ⬚ are covered in a different block.

⑯ ⇦
- A hollow arrow ⇦ indicates the block No. for the parts enclosed within a dotted line ⬚ .

⑰ ←
- A solid arrow ← indicates the block No. the part in question is connected to.

When the parts were revised

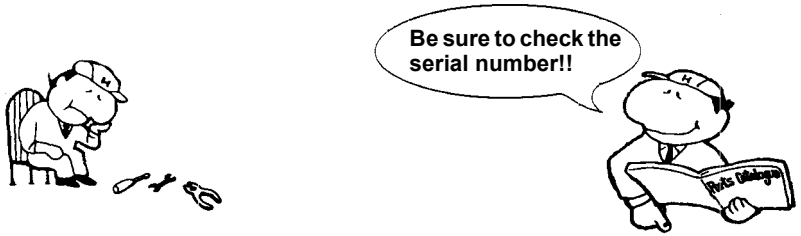

Ref. No.	Part No.	Description	Reqd. QTY BF 9.9D1	BFP 9.9D1	BF 10D1	BFP 10D1	BF 10B1	BFP 10B1	Serial No.
1	12166-ZW9-000	STOPPER, ENGINE SIDE	2	2	2	2	2	2	
2	12210-ZW9-000ZA	HEAD COMP., CYLINDER							
		NH8.....DARK GRAY	1	1	1	1	1	1	
3	12251-ZW9-003	GASKET, CYLINDER HEAD	1	1	1	1	1	1	
4	12310-ZW9-000	COVER COMP., HEAD	1	1	1	1	1	1	
5	12312-ZW9-000	PACKING, HEAD COVER	1	1	1	1	1	1	
6	15611-921-000	CAP, OIL (NO GAUGE)	1	1	1	1	1	1	
7	16617-ZW9-000	HOLDER, CABLE (###)	1	1	1	1	1	1	-------- -------- SC,SG
	16617-ZW9-010		1	1	1	1	1	1	-------- 1001800 LHC,LHD
			1	1	1	1	1	1	1001801 -------- LHC,LHD

The number has been used from the initial model without revision.

When shown at the left side, it is applicable to the models of No.1001801 and the subsequent numbers.

When shown at the right side, it is applicable to the models up to No.1001800.

- The parts listed with "###" at the end of the parts name have limited supply period (parts not for sale).

Abbreviations used in the parts catalogue

- **The following abbreviations are used in the parts name column.**

A ..... Ampere
A.C. ..... Alternating current
ASSY. .... Assembly
AT. ..... Automatic transmission
C.D.I. ..... Capacitive discharge ignition
COMP. ... Complete
D.C. ..... Direct current
EX. ..... Exhaust
G.F.C.I ... Ground fault circuit interruptor
HEX. ..... Hexagonal
H.S.T. .... Hydrostatic transmission
FR. .....Front
IN. .....Inlet
L (100L) .Link (100 Links)
L. .....Left
MM .....Millimeter
MT. .....Manual Transmission
P.T.O. .....Power take off
R. .....Right
RR. .....Rear
STD. .....Standard
T (22T) ...Tooth (22 Teeth)
V .....Volt
W .....Watt

How to check the part block and serial numbers

Part block	Engine parts E-2~	Carburetor parts E-14
Numbers needed	Stamped engine number	Stamped carburetor identification number
Check point	①	②

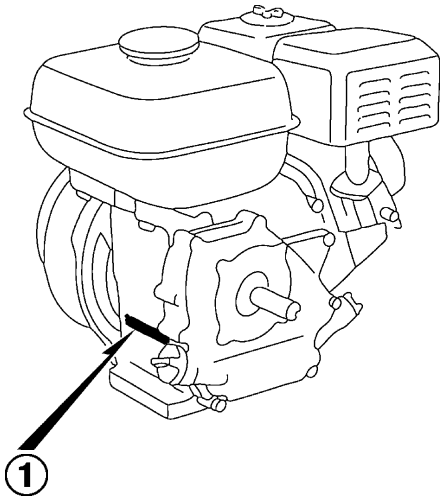

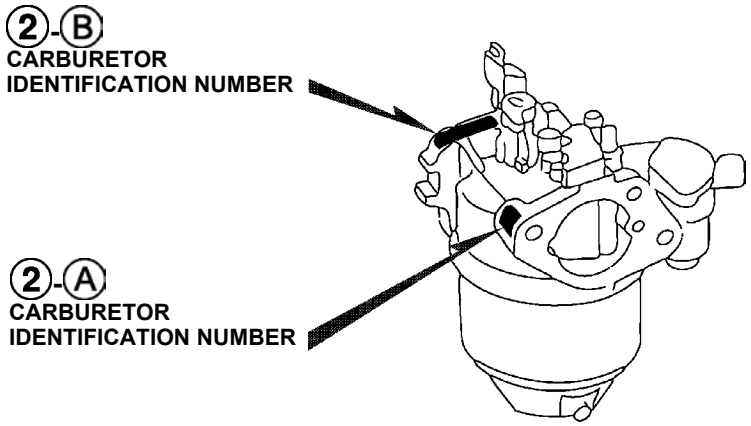

Models, parts catalogue codes and applicable serial numbers

- **Models, parts catalogue codes and applicable serial Nos. given in this parts catalogue can be identified as follows.**

Model	Type	Parts catalogue type	Applicable engine serial No.	Applicable carburetor identification No.
GP160H	CH1	CH1	GCASH-1000001~	BEA2F A
	CHJ	CHJ		
	CHJ1	CHJ1		
	CHK	CHK		
	CHW	CHW		
	DHT	DHT		
	PMB1	PMB1		
	QD1	QD1		
	QH1	QH1		
	QHB1	QHB1		
	QHKR	QHKR		
	QHT	QHT		
	QMPB	QMPB		
	QX1	QX1		
	QX3	QX3		
	SD1	SD1		
	SH1	SH1		
	SHW	SHW		
	VH1	VH1		

Model	Type	Parts catalogue type	Applicable engine serial No.	Applicable carburetor identification No.
GP160H	VX1	VX1	GCASH-1000001~	BEA2F A
	VX3	VX3		
	WH1	WH1		
	WHJ	WHJ		
	WHW	WHW		

Model	Type	Parts catalogue type	Applicable engine serial No.	Applicable carburetor identification No.
GP200H	CH1	CH1	GCATH-1000001~	BE69G A
	CHJ	CHJ		
	CHJ1	CHJ1		
	CHK	CHK		
	CHW	CHW		
	DHT	DHT		
	QD1	QD1		BE69F A
	QH1	QH1		BE69G A
	QHB1	QHB1		
	QHKR	QHKR		
	QHT	QHT		
	QMPB	QMPB		
	QX1	QX1		
	QX3	QX3		
	SD1	SD1		BE69F A
	SH1	SH1		BE69G A
	SHW	SHW		
	VX1	VX1		
	VX3	VX3		

* Of carburetor identification numbers, only the portions underlined in the example below are used for registration.

BE A2F A KC ナ
Ⓐ Ⓑ

Features of each type

- **See the following table for the features of each type. (Items in brackets are optional)**

Specifications	Model / Type	GP160H													
		CH1	CHJ	CHJ1	CHK	CHW	DHT	PMB1	QD1	QH1	QHB1	QHKR	QHT	QMPB	QX1
Crankshaft	M18 Stepped thread														
	3/4" Thread							●							
	19.8mm Ø Tapered														
	19mm Ø Straight								●	●	●	●	●	●	●
	20mm Ø Straight														
Camshaft P.T.O.	19mm Ø Straight						●								
	20mm Ø Straight	●	●	●	●	●									
Counter rotation		●	●	●	●	●	●								
Oil alert															●
Air cleaner	Dual	●	●	●	●	●	●	●		●	●	●	●	●	●
	Semi dry								●						

Specifications	Model / Type	GP160H									
		QX3	SD1	SH1	SHW	VH1	VX1	VX3	WH1	WHJ	WHW
Crankshaft	M18 Stepped thread								●	●	●
	3/4" Thread										
	19.8mm Ø Tapered					●	●	●			
	19mm Ø Straight	●									
	20mm Ø Straight		●	●	●						
Camshaft P.T.O.	19mm Ø Straight										
	20mm Ø Straight										
Counter rotation											
Oil alert		●					●	●			
Air cleaner	Dual	●		●	●	●	●	●	●	●	●
	Semi dry		●								

Specifications	Model / Type	GP200H													
		CH1	CHJ	CHJ1	CHK	CHW	DHT	QD1	QH1	QHB1	QHKR	QHT	QMPB	QX1	QX3
Crankshaft	M18 Stepped thread														
	3/4" Thread														
	19.8mm Ø Tapered														
	19mm Ø Straight							●	●	●	●	●	●	●	●
	20mm Ø Straight														
Camshaft P.T.O.	19mm Ø Straight						●								
	20mm Ø Straight	●	●	●	●	●									
Counter rotation		●	●	●	●	●	●								
Oil alert														●	●
Air cleaner	Dual	●	●	●	●	●	●		●	●	●	●	●	●	●
	Semi dry							●							

Specifications	Model / Type	GP200H				
		SD1	SH1	SHW	VX1	VX3
Crankshaft	M18 Stepped thread					
	3/4" Thread					
	19.8mm Ø Tapered				●	●
	19mm Ø Straight					
	20mm Ø Straight	●	●	●		
Camshaft P.T.O.	19mm Ø Straight					
	20mm Ø Straight					
Counter rotation						
Oil alert					●	●
Air cleaner	Dual		●	●	●	●
	Semi dry	●				

Fuel hose, general purpose hoses and vinyl hose

- The standard part fuel hose, general purpose hose and vinyl hose may be substituted by the coiled bulk part.
- When ordering the standard part fuel hose, general purpose hose and vinyl hose use the bulk part number written in the parts catalog in brackets ( ) underneath the part name.
- When exchanging the hose, cut and use at the specified length as mentioned in the part name.
  (For the method of cutting the bulk part, and method of filling out orders etc., please refer to the instructions issued with the bulk part.)

Bulk part number of fuel hose, general purpose hose and vinyl hose.

Example: 9 5 0 0 1 - 7 5 0 0 1 - 5 0 M

Bulk part number:
Refers to the bulk part.

Marking code (fuel hose and general purpose hose)
Change code (Vinyl hose)
Indicates number mark or change sequence, however, the code for the bulk part must be strictly 0 (zero).

Types of code:

- Fuel hose
  - 2: Red outside braid (3 mm inside dia. only)
  - 5: Black inside braid
  - 3: Red (3 mm inside dia. only)
  - 4: Ash gray with red stripe (3 mm inside dia. only)
  - 6: Black
- General hose
  - 1: Ash gray
  - 2: Ash gray
  - 3: Black
  - 5: Black
- Vinyl hose
  - 1: Clear
  - 2: Black
  - 3: Light red
  - 6: Light red
  - 7: Pale black

Lengths:
001: 1 m (standard)
003: 3 m
008: 8 m
} Application or specification of some parts is not settled.

I.D code: (fuel hose and general purpose hose)

30: 3.0 mm	50: 5.0 mm	70: 7.0 mm	11: 11 mm	12: 12 (outside dia. 17) mm
35: 3.5 mm	55: 5.3 mm, 5.5 mm	75: 7.3 mm, 7.5 mm	91: 12 (outside dia. 15) mm	14: 14 mm
45: 4.5 mm	65: 6.5 mm	80: 8.0 mm	92: 12 (outside dia. 16) mm	17: 17 mm

ID./OD. code: (vinyl hose)

01: ID. 2.9, OD. 6.8 mm	12: ID. 5.0, OD. 7.0 mm	21: ID. 8.0, OD. 9.0 mm	37: ID. 11.0, OD. 15.0 mm	50: ID. 16.0, OD. 19.0 mm
03: ID. 3.0, OD. 6.0 mm	10: ID. 5.0, OD. 8.0 mm	23: ID. 8.0, OD. 12.0 mm	38: ID. 12.0, OD. 13.0 mm	55: ID. 17.5, OD. 20.5 mm
05: ID. 3.5, OD. 6.5 mm	11: ID. 5.0, OD. 9.0 mm	25: ID. 9.0, OD. 11.0 mm	39: ID. 12.0, OD. 14.0 mm	60: ID. 22.0, OD. 27.0 mm
07: ID. 4.0, OD. 7.0 mm	14: ID. 6.0, OD. 9.0 mm	27: ID. 9.0, OD. 13.0 mm	40: ID. 12.0, OD. 16.0 mm	
08: ID. 4.5, OD. 6.5 mm	17: ID. 7.0, OD. 9.0 mm	33: ID. 10.0, OD. 14.0 mm	43: ID. 13.0, OD. 15.0 mm	
09: ID. 4.5, OD. 8.0 mm	19: ID. 7.0, OD. 11.0 mm	36: ID. 11.0, OD. 13.0 mm	45: ID. 14.0, OD. 18.0 mm	

Hose type:
1: Fuel hose
3: Vinyl hose
5: General hose

◎ **CAUTION: It is DANGEROUS to confuse the fuel hose with the general purpose hose or vinyl hose.**
Never use a general purpose hose or vinyl hose in place of a fuel hose or vice versa. Always use the correct bulk part in the parts catalogue, according to the service manual or the instructions issued with the bulk part.

FLAT RATE SERVICE TIME

Flat rate service time (FRT) means the standard time required to service a product, which is listed in this manual to help the dealers control the actual working process and calculate the service charge by using it as a guide.

FRT setting system

- Net service time
  - Removal, Disassembly/reassembly, Installation
  - Inspection, Measurement, Adjustment, Confirmation
  - Diagnosis/troubleshooting (Electric system)
  - Completion inspection
- Float time
  - Preparation (Process check, Confirmation arrangement for necessary tools)
  - Related work (Transfer of products)

* Float time is set by multiplying the net service time by a given coefficient.

Editorial style

The service items shown in the text are listed with the exchange work time for the repair sales parts as the subject. Other representative service items not using repair parts (removal/installation, adjustment, inspection/measuring, and other work) are listed collectively in the list in the preface, classified according to the work.

FRT setting standard

- Decimal system (in unit of 0.1) is adopted to set FRT as it is convenient to calculate the wage.
  Example: (0.1) → 6 minutes, (0.2) → 12 minutes
  [Labor cost per hour] x [FRT] = [Wage]
- FRT is set with a hand tool.
- Service items and FRT can be subject to change depending on development of tools and service equipment and improvement in service procedure.

Work procedure

- As the work procedure is set with the work time according to the method in the separate Service Manual, refer to this Manual as required.
- Work methods permitting servicing in the shortest time still permitting assurance of safe work and product warranty are used for the setting of service items not listed in the Service Manual.
- Work basically is to be performed by one person, and when two or more people are required, setting is done as the total time for the number of people.
- The set value for the technological level of the workers uses a person with three years of experience in the repair of Honda products as the standard.
- Special tools and service equipment used to set FRT are those specified or recommended in Service Manual.

Service item whose FRT is not presented

- Accessories and service parts that are not listed to use in this manual.
- Locations with little aging deterioration or breakage during normal use.
- Service work that can be finished by one touch.
- Service work that is seldom done (i.e. extremely small causes of trouble and service frequency).
- Products and parts whose location for installation differs according to its status of use and application.

* When FRT is not presented, please calculate wages based on appropriate actual work time.

Operation not included of FRT

- Oil and coolant water drainig, Waiting time for warming up operation and etc..
- Additional operation that involves removal/installation of standard exterior equipment.
- Indirect time spent for service by visiting the customer, trade-in, and delivery.
- Indirect time required for ordering and delivery of parts.
- Cost for grease, adhesive agent, etc. used for service work.

Explanation of FRT by using an example
(The example may differ from the actual presented items)

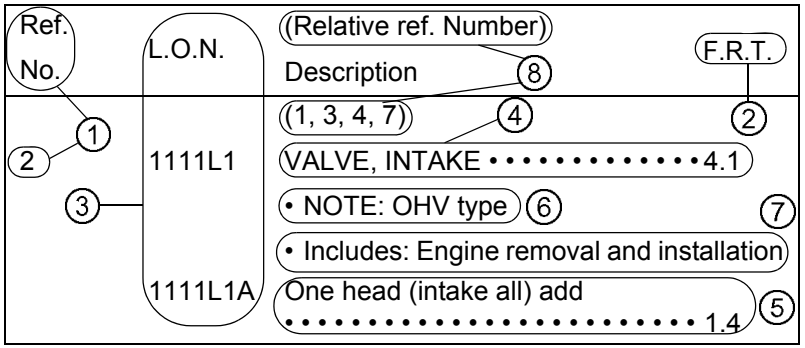

①Reference No. of the illustration of part that shows location of the replacement work.

②FRT is an abbreviation of Flat Rate Time indicating the standard service time required for the replacement.

③LON is an abbreviation of Labor Operation Number, and it is a classification of the service items by the work unit code.

The same operation code is used regardless of the models.

Standard operation is indicated with 6 digits code, and additional operation is indicated with 7 digits code.

④Indicating the intake valve replacement and FRT4.1.

⑤Indicating FRT1.4 that will be added when additional operation (whole intake side of one cylinder head) is done in association with intake valve replacement.

⑥Indicating work condition or application condition of the service item.

⑦Indicating work contents that are included in the service item.

⑧Indicating a reference No. whose operation and time are the same as FRT4.1 for the intake valve.

(The application range is limited to the service items without an LON setting within a same block.)

How to refer to the service item by using the sample
(intake valve replacement)

Open to the page of the block where the intake valve's spare part illustration is shown.

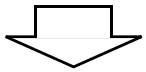

Look for the intake valve illustration, and refer to the service item and FRT that agree with the reference No.

Indication mark for the listing of service items that continues to the following page

Ref. No.	L.O.N.	(Relative ref. Number) Description	F.R.T.
2	**1111L1**	**VALVE, INTAKE** • • • • • • • • • • • •	**4.1**
	•	•	•
	•	•	•
+			

Mark indicated at the last line.

Indication of the block with no setting of FRT

Ref. No.	L.O.N.	(Relative ref. Number) Description	F.R.T.
NO INFORMATION • • • • • • • • • • • • • • • • • • •			

- **LON code system**

1	11	1	L1	A
a	b	c	d	e

a) Category code..... Engine
b) Location/function code..... Engine upper
c) Operation code..... Replace
d) Operation sequence number (Unit code can be shown with alphabet)
..... Intake valve
(No regular rule of code)
e) Additional code ..... One head (intake all)
(No regular rule of code)

1	11	1	L1	A
a		c		

a) Category codes and classification

Code	Category
1	Engine
2	Power drive
3	Fuel & Exhaust
4	Frame & Body
5	Steering
6	Electrical
7	Axle & Brake
8	Control system
9	-
0	Attachments

c) Operation codes and classification

Code	Operation category
1	Replace, Removal/Installation, Change
2	Overhaul
3	Adjust, Rotation
4	(Paint-related work: Top-coat)
5	Test, Inspect/diagnose, Measurement
6	(Overhaul-related work: Rebore)
7	(Overhaul-related work: Reseal)
8	(Resurface)
9	(Paint-related work: Refinish)
0	Repair, Cleaning, Air bleeding

Major service items without using spare parts
Adjustment, Inspection/Measurement, Overhaul, Other work

E: Engine, T: Transmission, D: Drive system, B: Body and related parts

• **Adjustment**

	LON	DESCRIPTION	FRT
E	1113A1	**VALVE CLEARANCE-ADJUSTMENT** NOTE: For 1 product	0.3
	1163A0	**CONTROL, THROTTLE/GOVERNOR-ADJUSTMENT**	0.2
	3113A2	**CARBURETOR IDLE-ADJUSTMENT**	0.2

• **Inspection/Measurement**

	LON	DESCRIPTION	FRT
E	1105A0	**ENGINE OIL-INSPECTION**	0.1

• **Overhaul**

Work condition: The required Measurements, inspections, adjustments, and cleaning/washing of each part are performed, including the main body removal/installation work and the replacement of defective parts.

	LON	DESCRIPTION	FRT
E	3112A0	**CARBURETOR-OVERHAUL** INCLUDES: All necessary adjustment	0.6

• **Other work**

	LON	DESCRIPTION	FRT
E	1101E1	**ENGINE OIL-CHANGE** INCLUDES: Engine oil-inspection	0.1
	3120A0	**AIR CLEANER-CLEANING** INCLUDES: Air cleaner-inspection	0.2
	6140A0	**SPARK PLUG-ADJUSTMENT/CLEANING** INCLUDES: Spark plug check NOTE: For 1 product	0.1

E-2 D 1

CYLINDER HEAD

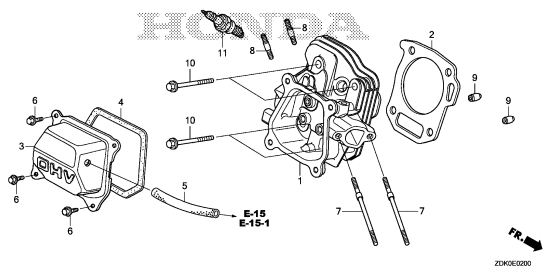

E-3 D 2

CYLINDER BARREL

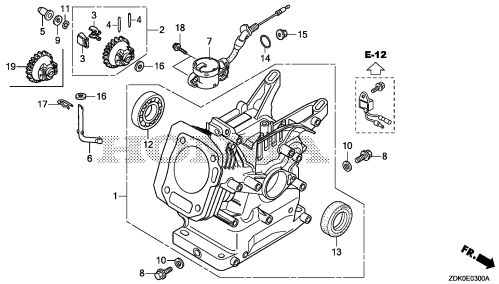

E-6 D 4

CRANKCASE COVER

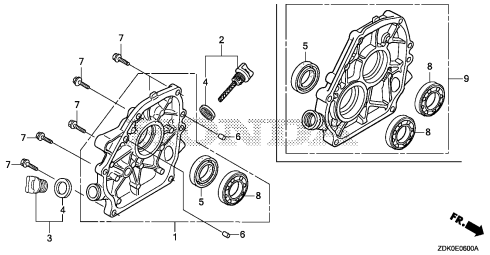

E-7 D 5

CRANKSHAFT

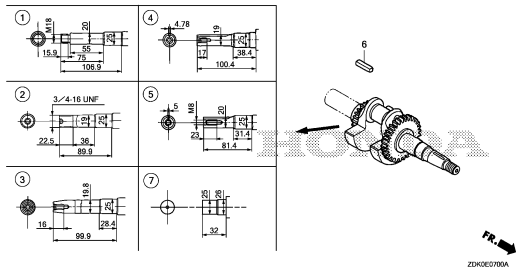

E-8 D 6

PISTON

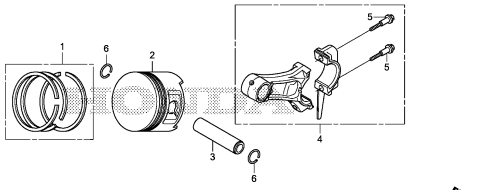

E-9 D 7

CAMSHAFT

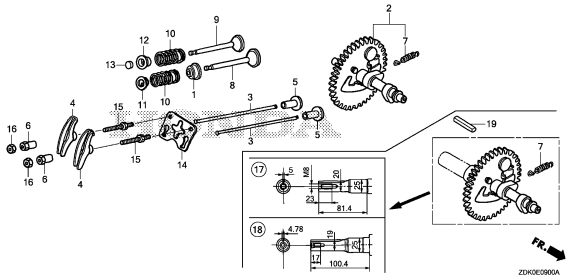

E-11 D10

RECOIL STARTER(1)

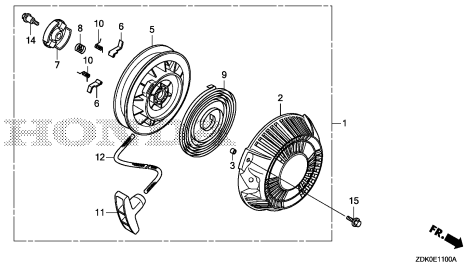

E-11-1 D11

RECOIL STARTER(2)

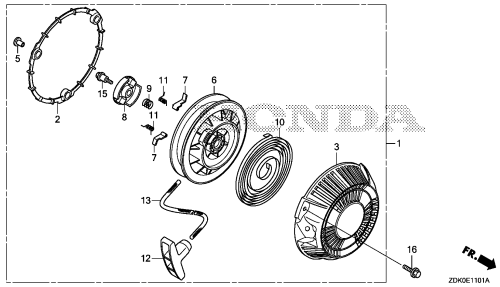

E-11-2 D12

RECOIL STARTER(3)(COUNTER ROTATION)

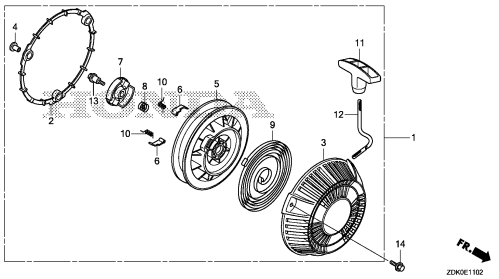

E-12 D13

FAN COVER

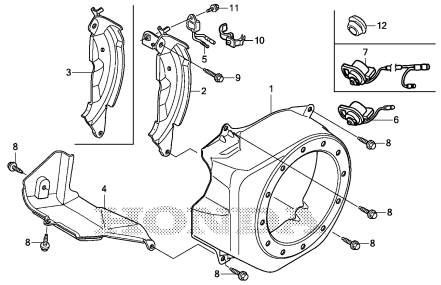

E-14 D14

CARBURETOR

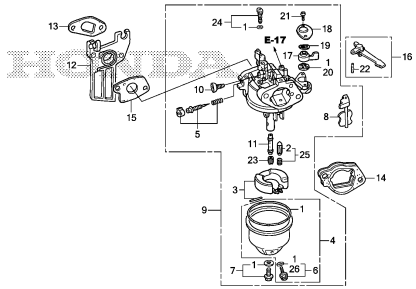

E-15 D16

AIR CLEANER(DUAL)

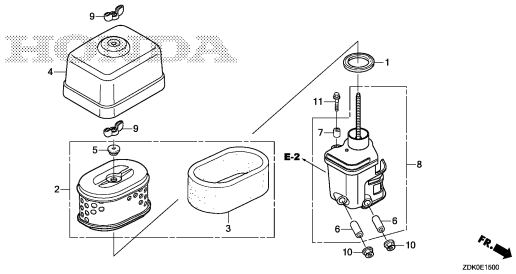

E-15-1 E 1

AIR CLEANER(SEMI DRY)

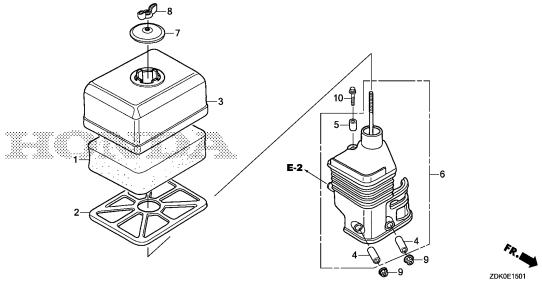

E-16 E 2

MUFFLER

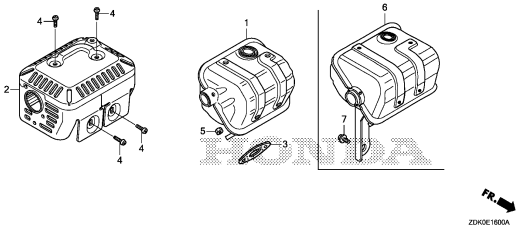

E-17 E 3

FUEL TANK

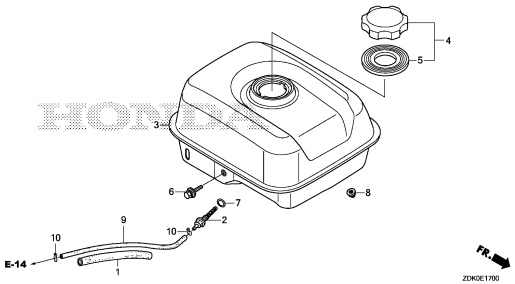

E-19 E 4

FLYWHEEL

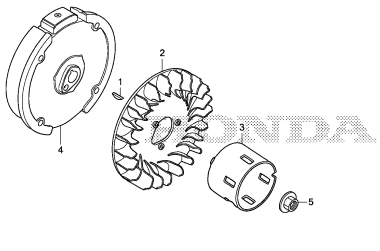

E-20 E 5

IGNITION COIL

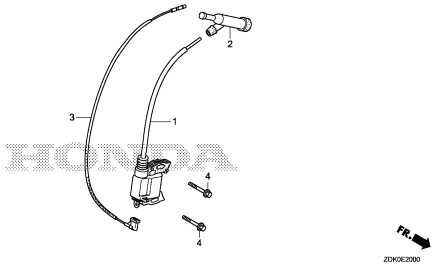

E-22 E 6

CONTROL

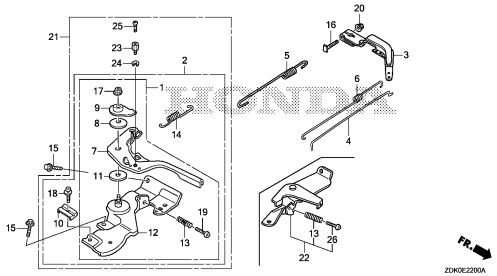

E-28 E 8

LABEL

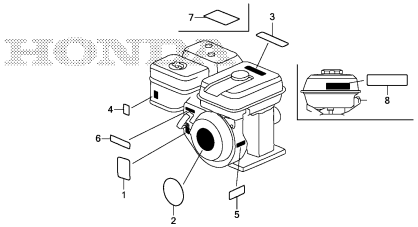

E-29 E 9

TOOL

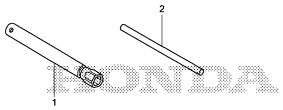

E-40 E10

OTHER PARTS

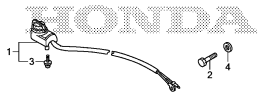

EOP-1 E11

GASKET KIT

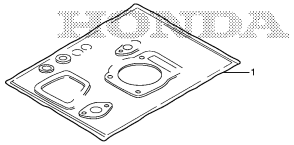

CYLINDER HEAD

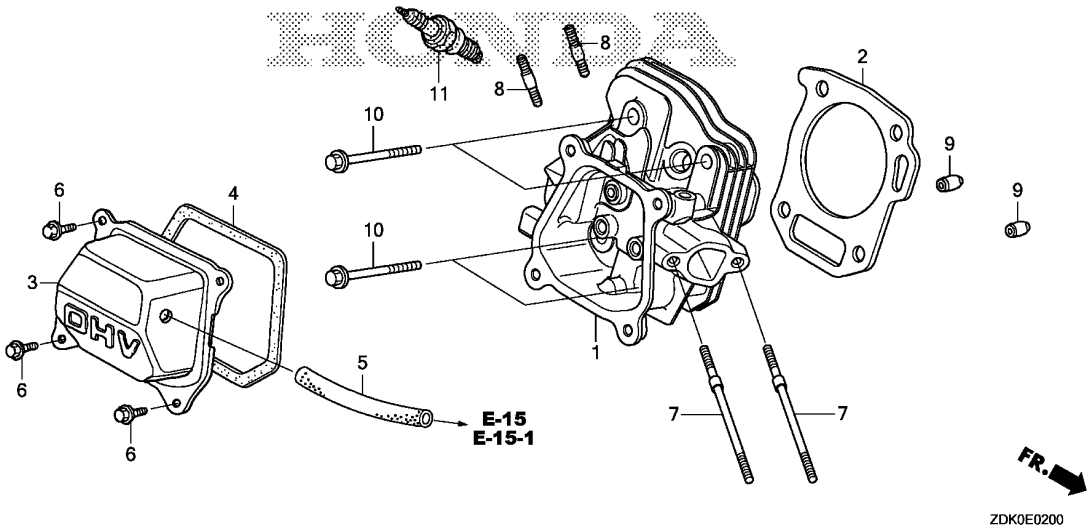

Ref. No.	L.O.N.	(Relative ref. Number) Description	F.R.T.
1	1111N3	HEAD, CYLINDER ----------	0.9
		.INCLUDES: Valve clearance adjustment and reface	
2	1111N4	GASKET, CYLINDER HEAD --------	0.5
3		(4)	
	1111D5	CYLINDER HEAD COVER AND/OR PACKING ----------	0.1
5	1111K5	TUBE, BREATHER ----------	0.1
11	6141C1	PLUG, SPARK ----------	0.1
		.INCLUDES: Spark plug check	

Ref. No.	Part No.	Description	Reqd. QTY GP 160 H	Reqd. QTY GP 200 H	Serial No.	Parts catalogue code
1	12210-Z1T-405	HEAD COMP., CYLINDER --------	1	1		
2	12251-ZL0-003	GASKET, CYLINDER HEAD (NIPPON LEAKLESS)	1	1		
3	12310-ZE1-020	COVER COMP., HEAD ----------	1	1		
4	12312-Z1T-701	PACKING, HEAD COVER (NINGBO SIL GASKET)	1	1		
	12391-ZE1-000	PACKING, HEAD COVER ---------	(1)	(1)		
5	15721-ZH8-000	TUBE, BREATHER ----------	1	1		
6	90013-883-000	BOLT, FLANGE, 6X12(CT200) ---	4	4		
7	90043-ZDK-000	BOLT, STUD, 6X112 ----------	2	2		
8	90047-ZDK-000	BOLT, STUD, 8X32 ----------	2	2		
9	94301-10160	DOWEL PIN, 10X16 ----------	2	2		
10	95701-08060-00	BOLT, FLANGE, 8X60 ---------	4	4		
11	98079-56846	PLUG, SPARK(BPR6ES)(NGK) ----	1	1		
	98079-56855	PLUG, SPARK(W20EPR-U)(DENSO)	1	1	-------- --------	CH1,CHJ,CHJ1,CHK,CHW,DHT,QD1,QH1,QHB1,QHKR,QHT,QMPB,QX1,QX3,SD1,SH1 SHW,VH1,VX1,VX3

CYLINDER BARREL

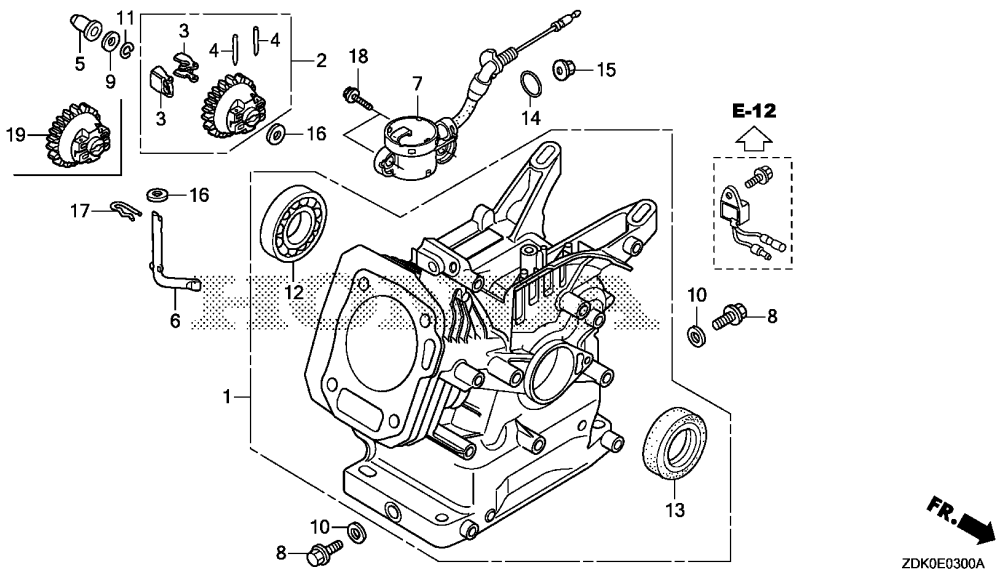

Ref. No.	L.O.N.	(Relative ref. Number) Description	F.R.T.
1	11O1A0	BARREL, CYLINDER ·····	2.0
2		(3,19)	
	1161C4	GOVERNOR ASSEMBLY ·····	1.0
5	1161B6	SLIDER, GOVERNOR ·····	0.4
6	1161B4	SHAFT, GOVERNOR ARM ·····	0.9
7		(14)	
	6151E8	SWITCH, OIL LEVEL ·····	0.5
12	11O1A4	BEARING, CRANKSHAFT :FRONT ···	1.9
13	11O1E4	OIL SEAL, CRANKSHAFT :FRONT ··	1.8

Ref. No.	Part No.	Description	Reqd. QTY GP 160 H	Reqd. QTY GP 200 H	Serial No.	Parts catalogue code
1	12000-ZDK-405	BARREL ASSY., CYLINDER ·····	1	-	-------- --------	CH1,CHJ,CHJ1,CHK,CHW,DHT,PMB1,QD1,QH1,QHB1,QHKR,QHT,QMPB,SD1,SH1,SHW VH1,WH1,WHJ,WHW
	12000-ZDK-406	·····	1	-	-------- --------	QX1,QX3,VX1,VX3
	12000-ZDL-405	·····	-	1	-------- --------	CH1,CHJ,CHJ1,CHK,CHW,DHT,QD1,QH1,QHB1,QHKR,QHT,QMPB,SD1,SH1,SHW
	12000-ZDL-406	·····	-	1	-------- --------	QX1,QX3,VX1,VX3
2	16510-Z1T-000	GOVERNOR ASSY. ·····	1	-		
3	16511-ZE1-000	WEIGHT, GOVERNOR ·····	2	-		
4	16513-ZE1-000	PIN, GOVERNOR WEIGHT ·····	2	-		
5	16531-Z1T-000	SLIDER, GOVERNOR ·····	1	1		
6	16541-Z1T-000	SHAFT, GOVERNOR ARM ·····	1	1		
7	35480-ZOT-003	SWITCH ASSY., OIL LEVEL ·····	1	1	-------- --------	QX1,QX3,VX1,VX3
8	90131-ZE1-000	BOLT, DRAIN PLUG ·····	2	2		
9	90451-Z1T-000	WASHER, THRUST, 6MM ·····	1	1		
10	90601-ZE1-000	WASHER, DRAIN PLUG, 10.2MM ··	2	2		
11	90602-ZE1-000	CLIP, GOVERNOR HOLDER ·····	1	1		
12	91001-Z1T-003	BEARING, RADIAL BALL, 6205 (NSK)	1	1		
	91001-ZF1-003	BEARING, RADIAL BALL(6205TMB) (NTN)	1	1		
	91001-ZF1-004	BEARING, RADIAL BALL(6205SH) (KOYO)	1	1		
13	91202-Z1T-003	OIL SEAL, 25X41X6 ·····	1	1		
14	91353-Z7E-003	O-RING, 14MM ·····	1	1	-------- --------	QX1,QX3,VX1,VX3
15	94050-10000	NUT, FLANGE, 10MM ·····	1	1	-------- --------	QX1,QX3,VX1,VX3
16	94101-06800	WASHER, PLAIN, 6MM ·····	2	2		
17	94251-08000	PIN, LOCK, 8MM ·····	1	1		

CYLINDER BARREL

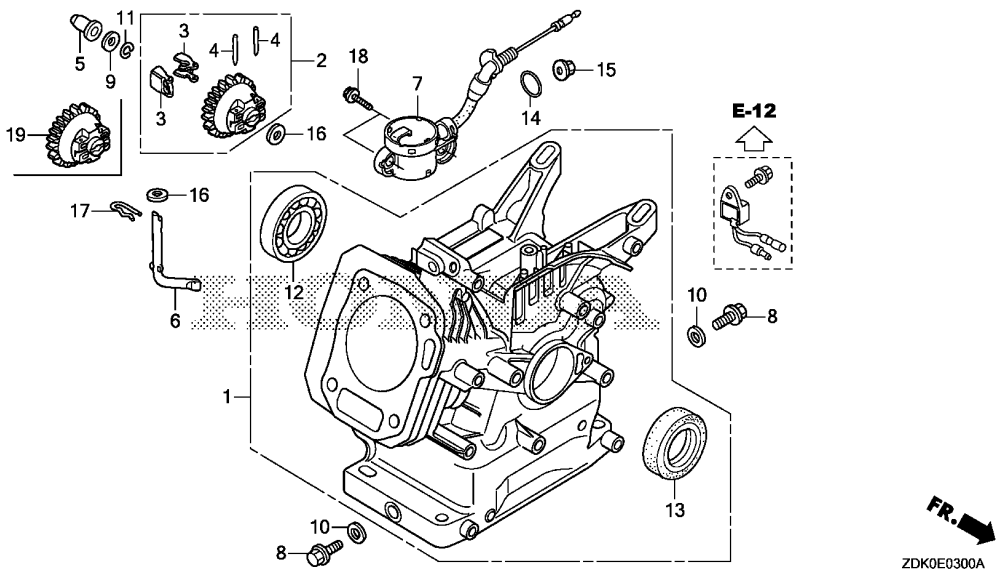

Ref. No.	Part No.	Description	Reqd. QTY GP 160 H	Reqd. QTY GP 200 H	Serial No.	Parts catalogue code
18	95701-06012-00	BOLT, FLANGE, 6X12 ----------	2	2	-------- --------	QX1,QX3,VX1,VX3
19	16510-ZDL-000	GOVERNOR ASSY. ----------	-	1		

CRANKCASE COVER

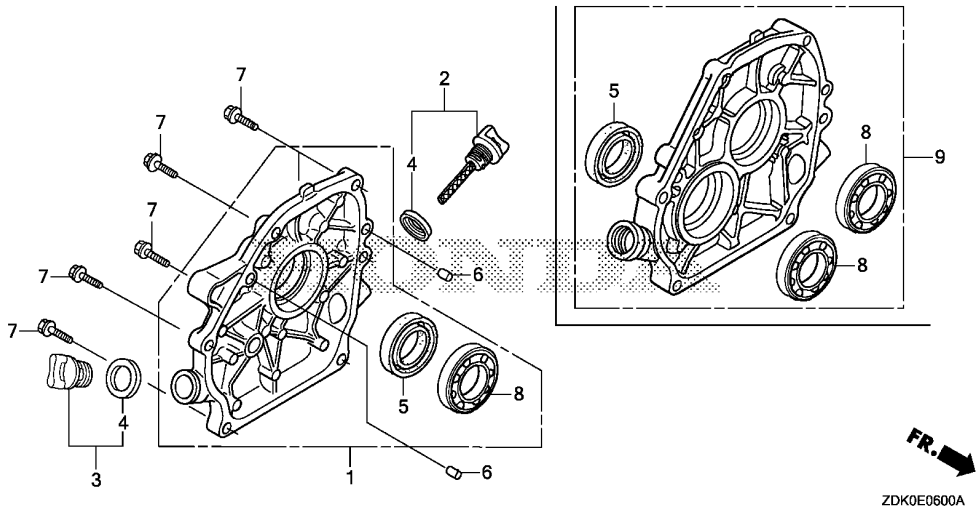

Ref. No.	L.O.N.	(Relative ref. Number) Description	F.R.T.
1		(9)	
	1101F1	COVER, CRANKCASE ·····	0.2
5	1101E5	OIL SEAL, CRANKSHAFT :REAR ···	0.3
8	1101A6	BEARING, CRANKSHAFT :REAR ····	0.4
	1111F0	BEARING, CAMSHAFT :REAR ·····	0.4

Ref. No.	Part No.	Description	Reqd. QTY GP 160 H	Reqd. QTY GP 200 H	Serial No.	Parts catalogue code
1	11300-ZDK-630	COVER ASSY., CRANKCASE ·····	1	1	-------- --------	PMB1,SD1,SH1,SHW,WH1,WHJ,WHW
	11300-ZDK-640	·····	1	1	-------- --------	QD1,QH1,QHB1,QHKR,QHT,QMPB,QX1,QX3,VH1,VX1,VX3
2	15600-Z1T-000	CAP ASSY., OIL FILLER ·····	1	1		
3	15600-Z1T-600	CAP ASSY., OIL FILLER ·····	1	1		
4	15625-Z1T-000	PACKING, OIL FILLER CAP ·····	2	2		
5	91202-Z1T-003	OIL SEAL, 25X41X6 ·····	1	1		
6	94301-08140	DOWEL PIN, 8X14 ·····	2	2		
7	95701-08032-00	BOLT, FLANGE, 8X32 ·····	6	6		
8	96100-62050-00	BEARING, RADIAL BALL, 6205 ··	2	2	-------- --------	CH1,CHJ,CHJ1,CHK,CHW,DHT
			1	1	-------- --------	PMB1,QD1,QH1,QHB1,QHKR,QHT,QMPB,QX1,QX3,SD1,SH1,SHW,VH1,VX1,VX3,WH1 WHJ,WHW
9	11300-ZDK-680	COVER ASSY., CRANKCASE ·····	1	1	-------- --------	CH1,CHJ,CHJ1,CHK,CHW,DHT

E-7 CRANKSHAFT

D 5

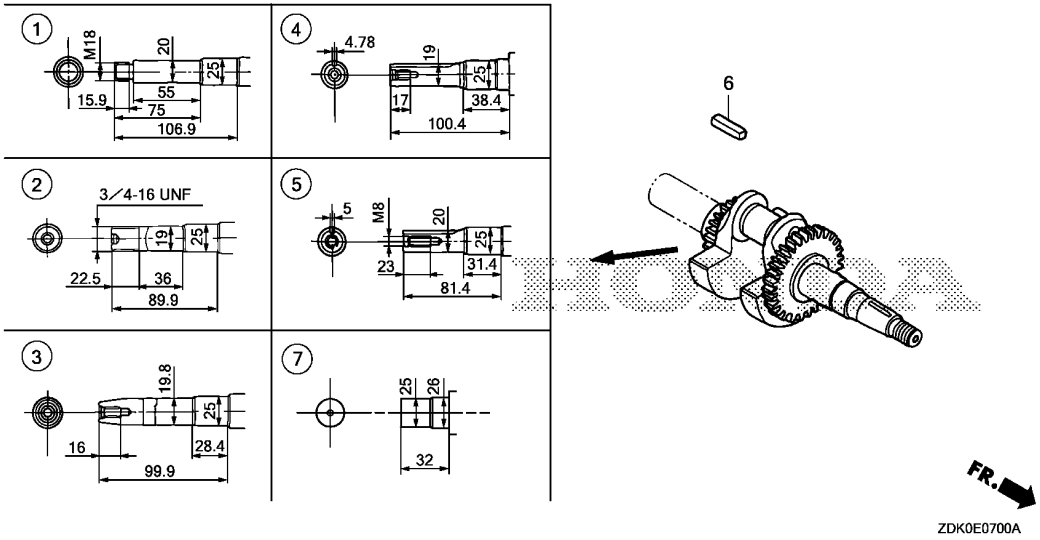

Ref. No.	L.O.N.	(Relative ref. Number) Description	F.R.T.
1		(2,3,4,5,7)	
	1101F0	CRANKSHAFT ----------	1.1

Ref. No.	Part No.	Description	Reqd. QTY GP 160 H	Reqd. QTY GP 200 H	Serial No.		Parts catalogue code
1	13310-Z1T-630	CRANKSHAFT COMP. ----------	1	-	--------	--------	WH1,WHJ,WHW
2	13310-Z1T-650	CRANKSHAFT COMP. ----------	1	-	--------	--------	PMB1
3	13310-Z1T-670	CRANKSHAFT COMP. ----------	1	-	--------	--------	VH1,VX1,VX3
	13310-ZCW-670	----------	-	1	--------	--------	VX1,VX3
4	13310-Z1T-800	CRANKSHAFT COMP. ----------	1	-	--------	--------	QD1,QH1,QHB1,QHKR,QHT,QMPB,QX1,QX3
	13310-ZCW-600	----------	-	1	--------	--------	QD1,QH1,QHB1,QHKR,QHT,QMPB,QX1,QX3
5	13310-Z1T-880	CRANKSHAFT COMP. ----------	1	-	--------	--------	SD1,SH1,SHW
	13310-ZCW-000	----------	-	1	--------	--------	SD1,SH1,SHW
6	90741-883-810	KEY, 5X5X33(YELLOW) ---------	1	1	--------	--------	CHJ,CHJ1,SD1,SH1,SHW
	90745-ZE1-600	KEY, 4.78X4.78X38 ----------	1	1	--------	--------	QD1,QH1,QHKR,QHT,QX1,QX3
7	13310-ZDK-681	CRANKSHAFT COMP. ----------	1	-	--------	--------	CH1,CHJ,CHJ1,CHK,CHW,DHT
	13310-ZDL-681	----------	-	1	--------	--------	CH1,CHJ,CHJ1,CHK,CHW,DHT

2

PISTON

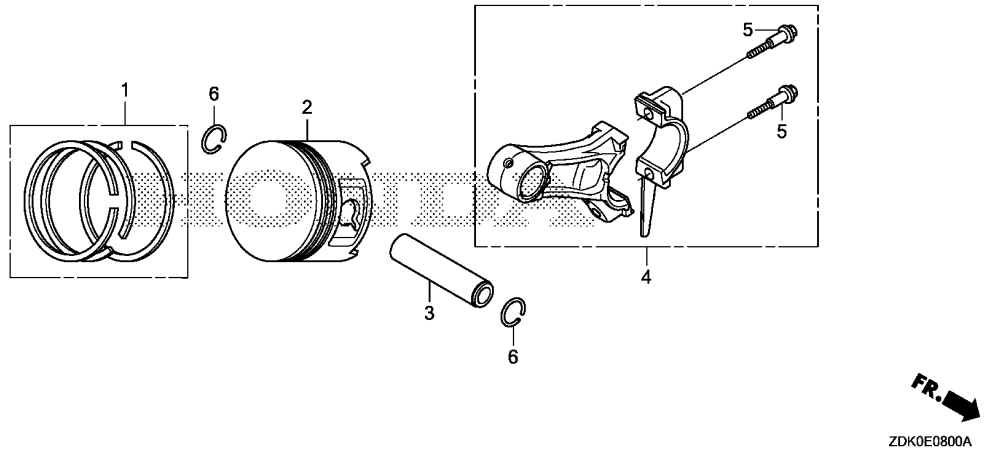

Ref. No.	L.O.N.	(Relative ref. Number) Description	F.R.T.
2		(1,3,4)	
	1111R1	PISTON AND/OR RING SET AND/OR BEARING AND/OR ROD ----------	1.1
		.INCLUDES: Inspection/ Measurement/Cleaning	

Ref. No.	Part No.	Description	Reqd. QTY GP 160 H	Reqd. QTY GP 200 H	Serial No.	Parts catalogue code
1	13010-Z4K-004	RING SET, PISTON(STD.)(TPR) -	1	1		
	13010-Z4P-003	RING SET, PISTON(STD.)(RIKEN)	1	1		
	13011-Z4K-004	RING SET, PISTON(0.25)(TPR) -	(1)	(1)		
	13011-Z4P-003	RING SET, PISTON(0.25)(RIKEN)	(1)	(1)		
	13012-Z4K-004	RING SET, PISTON(0.50)(TPR) -	(1)	(1)		
	13012-Z4P-003	RING SET, PISTON(0.50)(RIKEN)	(1)	(1)		
	13013-Z4K-004	RING SET, PISTON(0.75)(TPR) -	(1)	(1)		
	13013-Z4P-003	RING SET, PISTON(0.75)(RIKEN)	(1)	(1)		
2	13101-Z1T-010	PISTON(STD.)(JIALING-HONDA) -	1	-		
	13102-Z1T-000	PISTON(0.25) ----------	(1)	-		
	13103-Z1T-000	PISTON(0.50) ----------	(1)	-		
	13104-Z1T-000	PISTON(0.75) ----------	(1)	-		
	13101-ZDL-003	PISTON(STD.) ----------	-	1		
	13102-ZDL-003	PISTON(0.25) ----------	-	(1)		
	13103-ZDL-003	PISTON(0.50) ----------	-	(1)		
	13104-ZDL-003	PISTON(0.75) ----------	-	(1)		
3	13111-Z1T-000	PIN, PISTON ----------	1	1		
4	13200-Z1T-600	ROD ASSY., CONNECTING(JLH) --	1	1		
5	90001-Z1T-000	BOLT, CONNECTING ROD --------	2	2		
6	90551-ZE1-000	CLIP, PISTON PIN, 18MM ------	2	2		

CAMSHAFT

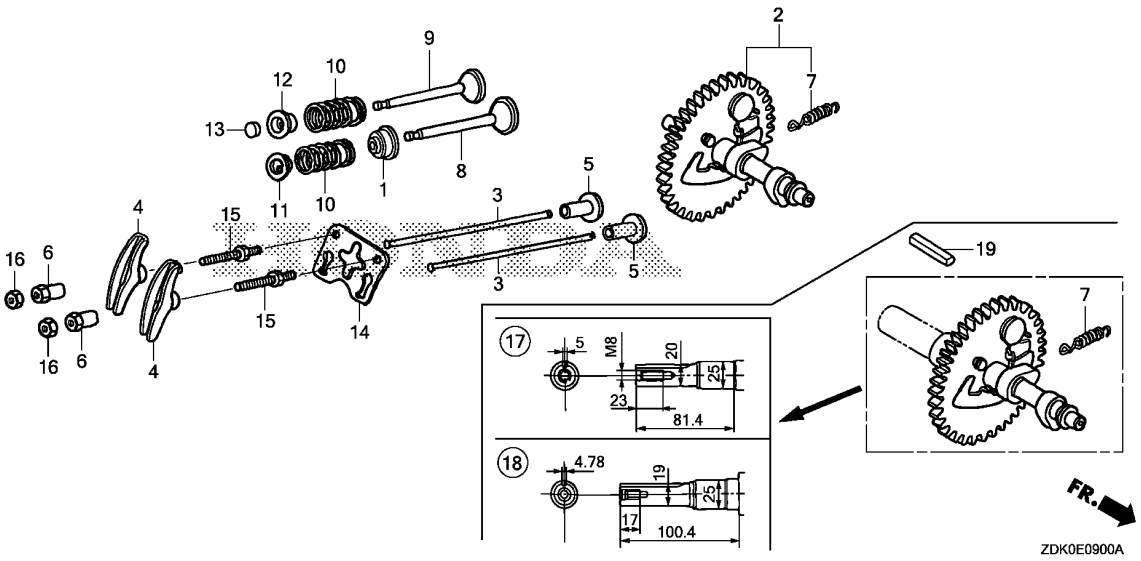

Ref. No.	L.O.N.	(Relative ref. Number) Description	F.R.T.
1	1111K2	SEAL, INTAKE VALVE STEM ····· .INCLUDES: Valve clearance adjustment	0.6
2		(17,18)	
	1111C2	CAMSHAFT ····· .INCLUDES: Valve clearance adjustment	0.4
3	1111L6	ROD, PUSH :INTAKE ····· .INCLUDES: Valve clearance adjustment	0.2
	1111L7	ROD, PUSH :EXHAUST ····· .INCLUDES: Valve clearance adjustment	0.2
	1111L8	ROD, PUSH :BOTH ····· .INCLUDES: Valve clearance adjustment	0.3
4	1111A2	ARM, ROCKER :INTAKE ····· .INCLUDES: Valve clearance adjustment	0.2
	1111A2A	.Replace exhaust rocker arm add ·····	0.1
	1111A1	ARM, ROCKER :EXHAUST ····· .INCLUDES: Valve clearance adjustment	0.2
	1111A1A	.Replace intake rocker arm add	0.1

Ref. No.	Part No.	Description	Reqd. QTY GP 160 H	Reqd. QTY GP 200 H	Serial No.	Parts catalogue code
1	12209-ZH8-003	SEAL, VALVE STEM ·····	1	1		
2	14100-Z1T-810	CAMSHAFT ASSY.(JLH) ·····	1	-	-------- --------	PMB1,QD1,QH1,QHB1,QHKR,QHT,QMPB,QX1,QX3,SD1,SH1,SHW,VH1,VX1,VX3,WH1 WHJ,WHW
	14100-ZL0-000	CAMSHAFT ASSY. ·····	-	1	-------- --------	QD1,QH1,QHB1,QHKR,QHT,QMPB,QX1,QX3,SD1,SH1,SHW,VX1,VX3
3	14410-ZE1-010	ROD, PUSH ·····	2	2		
4	14431-ZE1-000	ARM, VALVE ROCKER ·····	2	2		
5	14441-ZE1-010	LIFTER, VALVE ·····	2	-		
	14731-ZL0-000	·····	-	2		
6	14451-Z7E-000	PIVOT, ROCKER ARM ·····	2	2		
7	14568-ZE1-000	SPRING, WEIGHT RETURN ·····	1	1		
8	14711-ZF1-000	VALVE, IN. ·····	1	1		
9	14721-ZF1-000	VALVE, EX. ·····	1	1		
10	14751-ZF1-000	SPRING, VALVE ·····	2	2		
11	14771-ZE1-000	RETAINER, IN. VALVE SPRING ··	1	1		
12	14773-ZE1-000	RETAINER, EX. VALVE SPRING ··	1	1		
13	14781-ZE1-000	ROTATOR, VALVE ·····	1	1		
14	14791-ZE1-010	PLATE, PUSH ROD GUIDE ·····	1	1		
15	90012-ZE0-010	BOLT, PIVOT, 8MM ·····	2	2		
16	90206-ZE1-000	NUT, PIVOT ADJUSTING ·····	2	2		
17	14100-ZDK-681	CAMSHAFT ASSY. ·····	1	-	-------- --------	CH1,CHJ,CHJ1,CHK,CHW
	14100-ZDL-681	·····	-	1	-------- --------	CH1,CHJ,CHJ1,CHK,CHW
18	14100-ZDK-751	CAMSHAFT ASSY. ·····	1	-	-------- --------	DHT
	14100-ZDL-751	·····	-	1	-------- --------	DHT
19	90741-883-810	KEY, 5X5X33(YELLOW) ·····	1	1	-------- --------	CH1,CHK,CHW
	90745-ZE1-600	KEY, 4.78X4.78X38 ·····	1	1	-------- --------	DHT

CAMSHAFT

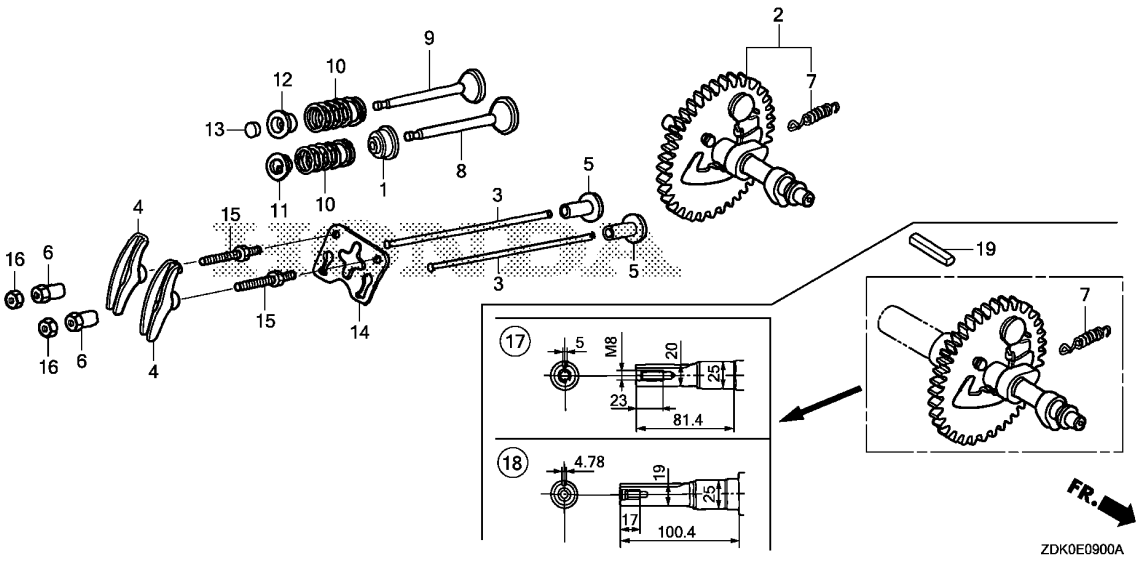

Ref. No.	L.O.N.	(Relative ref. Number) Description	F.R.T.
5	1111L9	LIFTER, VALVE :INTAKE ····· .INCLUDES: Valve clearance adjustment	0.4
	1111M0	LIFTER, VALVE :EXHAUST ····· .INCLUDES: Valve clearance adjustment	0.4
	1111M1	LIFTER, VALVE :BOTH ····· .INCLUDES: Valve clearance adjustment	0.4
8	1111L1	VALVE, INTAKE ····· .INCLUDES: Valve clearance adjustment and reface	0.7
	1111L1E	.Replace intake and exhaust all add ·····	0.2
9	1111L0	VALVE, EXHAUST ····· .INCLUDES: Valve clearance adjustment and reface	0.7
	1111L0E	.Replace intake and exhaust all add ·····	0.2
10	1111P3	SPRING, VALVE :INTAKE ····· .INCLUDES: Valve clearance adjustment	0.6
	1111P3A	.Replace intake and exhaust all add ·····	0.1
+	1111P4	SPRING, VALVE :EXHAUST ·····	0.6

CAMSHAFT

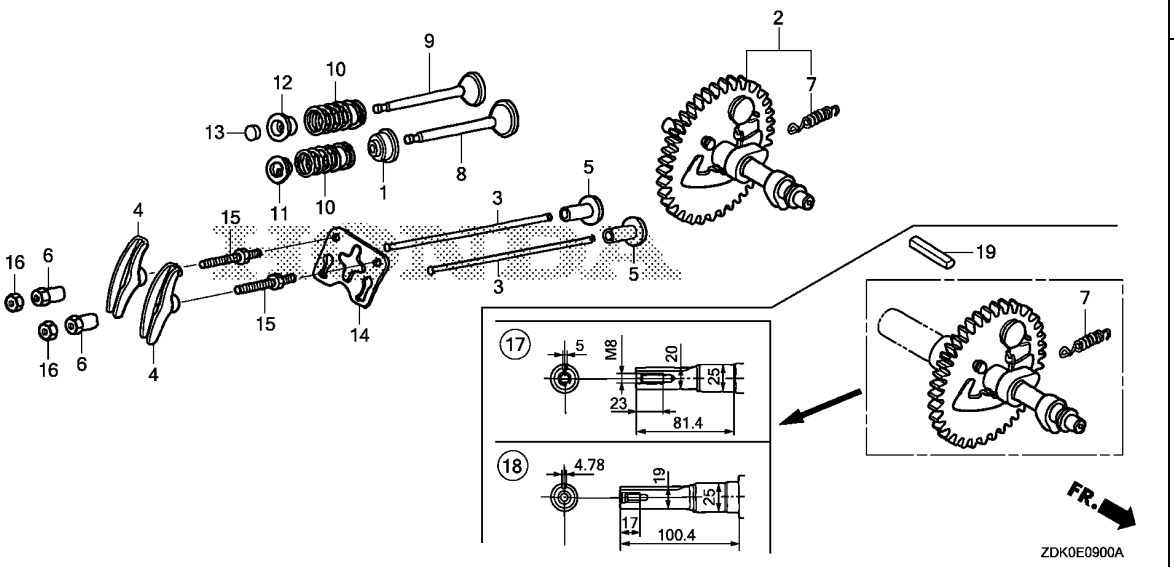

Ref. No.	L.O.N.	(Relative ref. Number) Description	F.R.T.
+10		.INCLUDES: Valve clearance adjustment	
	1111P4A	.Replace intake and exhaust all add ----------	0.1
13	1111J7	ROTATOR, VALVE ----------	0.2
		.INCLUDES: Valve clearance adjustment	

RECOIL STARTER(1)

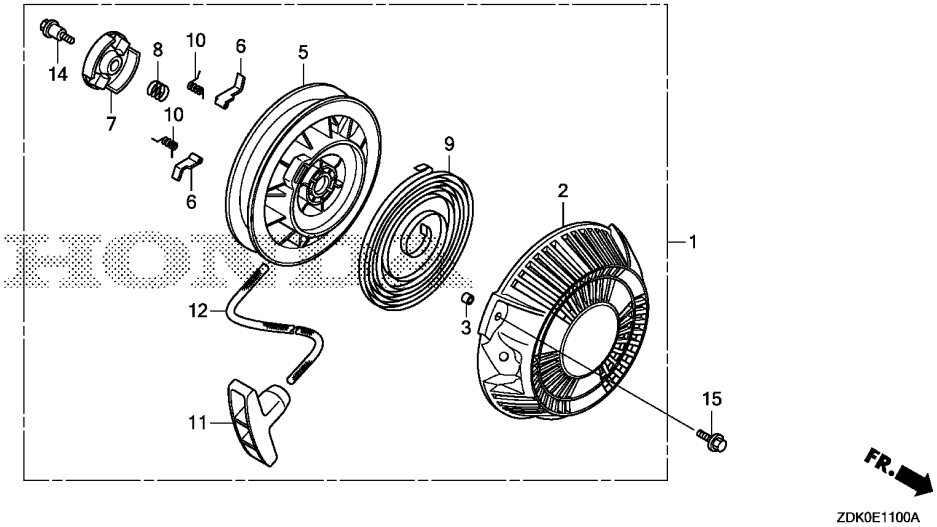

Ref. No.	L.O.N.	(Relative ref. Number) Description	F.R.T.
1	1121B9	STARTER, RECOIL ----------	0.1
5	1121B1	REEL, RECOIL STARTER ---------	0.3
6		(10)	
	1121B0	STARTER RATCHET AND/OR SPRING	0.2
		.NOTE: Same time for two units	
7		(8)	
	1121A4	GUIDE, RATCHET ----------	0.2
9	1121B7	SPRING, RECOIL STARTER RETURN	0.3
11	1121A3	GRIP, RECOIL STARTER ---------	0.1
12	1121B3	ROPE, RECOIL STARTER ---------	0.3

Ref. No.	Part No.	Description	Reqd. QTY GP 160 H	Reqd. QTY GP 200 H	Serial No.		Parts catalogue code
1	28400-ZDK-003	STARTER ASSY., RECOIL -------	1	-	--------	--------	PMB1,QD1,QH1,QHB1,QHKR,QHT,QMPB,QX1,QX3,SD1,SH1,SHW,VH1,VX1,VX3,WH1 WHJ,WHW
2	28414-ZDK-003	CASE, RECOIL STARTER --------	1	-	--------	--------	PMB1,QD1,QH1,QHB1,QHKR,QHT,QMPB,QX1,QX3,SD1,SH1,SHW,VH1,VX1,VX3,WH1 WHJ,WHW
3	28415-ZDK-003	COLLAR, RECOIL STARTER ------	3	-	--------	--------	PMB1,QD1,QH1,QHB1,QHKR,QHT,QMPB,QX1,QX3,SD1,SH1,SHW,VH1,VX1,VX3,WH1 WHJ,WHW
5	28421-ZDK-003	REEL, RECOIL STARTER --------	1	-	--------	--------	PMB1,QD1,QH1,QHB1,QHKR,QHT,QMPB,QX1,QX3,SD1,SH1,SHW,VH1,VX1,VX3,WH1 WHJ,WHW
6	28422-ZDK-003	RATCHET, STARTER ----------	2	-	--------	--------	PMB1,QD1,QH1,QHB1,QHKR,QHT,QMPB,QX1,QX3,SD1,SH1,SHW,VH1,VX1,VX3,WH1 WHJ,WHW
7	28433-ZDK-003	GUIDE, RATCHET ----------	1	-	--------	--------	PMB1,QD1,QH1,QHB1,QHKR,QHT,QMPB,QX1,QX3,SD1,SH1,SHW,VH1,VX1,VX3,WH1 WHJ,WHW
8	28441-ZDK-003	SPRING, FRICTION ----------	1	-	--------	--------	PMB1,QD1,QH1,QHB1,QHKR,QHT,QMPB,QX1,QX3,SD1,SH1,SHW,VH1,VX1,VX3,WH1 WHJ,WHW
9	28442-ZDK-003	SPRING, RECOIL STARTER ------	1	-	--------	--------	PMB1,QD1,QH1,QHB1,QHKR,QHT,QMPB,QX1,QX3,SD1,SH1,SHW,VH1,VX1,VX3,WH1 WHJ,WHW
10	28443-ZDK-003	SPRING, RETURN ----------	2	-	--------	--------	PMB1,QD1,QH1,QHB1,QHKR,QHT,QMPB,QX1,QX3,SD1,SH1,SHW,VH1,VX1,VX3,WH1 WHJ,WHW
11	28461-ZDK-003	KNOB, RECOIL STARTER --------	1	-	--------	--------	PMB1,QD1,QH1,QHB1,QHKR,QHT,QMPB,QX1,QX3,SD1,SH1,SHW,VH1,VX1,VX3,WH1 WHJ,WHW
12	28462-ZDK-003	ROPE, RECOIL STARTER --------	1	-	--------	--------	PMB1,QD1,QH1,QHB1,QHKR,QHT,QMPB,QX1,QX3,SD1,SH1,SHW,VH1,VX1,VX3,WH1 WHJ,WHW
14	90003-ZDK-003	SCREW, SETTING ----------	1	-	--------	--------	PMB1,QD1,QH1,QHB1,QHKR,QHT,QMPB,QX1,QX3,SD1,SH1,SHW,VH1,VX1,VX3,WH1 WHJ,WHW
15	95701-06016-00	BOLT, FLANGE, 6X16 ---------	3	-	--------	--------	PMB1,QD1,QH1,QHB1,QHKR,QHT,QMPB,QX1,QX3,SD1,SH1,SHW,VH1,VX1,VX3,WH1 WHJ,WHW

RECOIL STARTER(2)

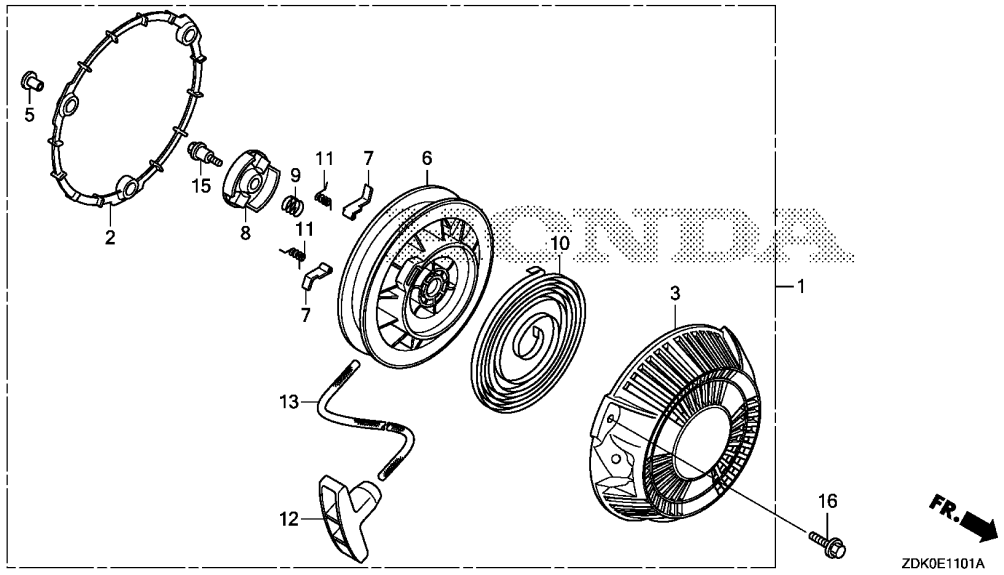

Ref. No.	L.O.N.	(Relative ref. Number) Description	F.R.T.
1	1121B9	STARTER, RECOIL ----------	0.1
6	1121B1	REEL, RECOIL STARTER ---------	0.3
7		(11)	
	1121B0	STARTER RATCHET AND/OR SPRING	0.2
		.NOTE: Same time for two units	
8		(9)	
	1121A4	GUIDE, RATCHET ----------	0.2
10	1121B7	SPRING, RECOIL STARTER RETURN	0.3
12	1121A3	GRIP, RECOIL STARTER ---------	0.1
13	1121B3	ROPE, RECOIL STARTER ---------	0.3

Ref. No.	Part No.	Description	Reqd. QTY GP 160 H	Reqd. QTY GP 200 H	Serial No.		Parts catalogue code
1	28400-ZDL-003	STARTER ASSY., RECOIL -------	-	1	--------	--------	QD1,QH1,QHB1,QHKR,QHT,QMPB,QX1,QX3,SD1,SH1,SHW,VX1,VX3
2	28405-ZDL-003	SPACER, RECOIL STARTER MOUNTING	-	1	--------	--------	QD1,QH1,QHB1,QHKR,QHT,QMPB,QX1,QX3,SD1,SH1,SHW,VX1,VX3
3	28414-ZDK-003	CASE, RECOIL STARTER --------	-	1	--------	--------	QD1,QH1,QHB1,QHKR,QHT,QMPB,QX1,QX3,SD1,SH1,SHW,VX1,VX3
5	28417-ZDL-003	COLLAR, RECOIL STARTER ------	-	3	--------	--------	QD1,QH1,QHB1,QHKR,QHT,QMPB,QX1,QX3,SD1,SH1,SHW,VX1,VX3
6	28421-ZDK-003	REEL, RECOIL STARTER --------	-	1	--------	--------	QD1,QH1,QHB1,QHKR,QHT,QMPB,QX1,QX3,SD1,SH1,SHW,VX1,VX3
7	28422-ZDK-003	RATCHET, STARTER ----------	-	2	--------	--------	QD1,QH1,QHB1,QHKR,QHT,QMPB,QX1,QX3,SD1,SH1,SHW,VX1,VX3
8	28433-ZDK-003	GUIDE, RATCHET ----------	-	1	--------	--------	QD1,QH1,QHB1,QHKR,QHT,QMPB,QX1,QX3,SD1,SH1,SHW,VX1,VX3
9	28441-ZDK-003	SPRING, FRICTION ----------	-	1	--------	--------	QD1,QH1,QHB1,QHKR,QHT,QMPB,QX1,QX3,SD1,SH1,SHW,VX1,VX3
10	28442-ZDK-003	SPRING, RECOIL STARTER ------	-	1	--------	--------	QD1,QH1,QHB1,QHKR,QHT,QMPB,QX1,QX3,SD1,SH1,SHW,VX1,VX3
11	28443-ZDK-003	SPRING, RETURN ----------	-	2	--------	--------	QD1,QH1,QHB1,QHKR,QHT,QMPB,QX1,QX3,SD1,SH1,SHW,VX1,VX3
12	28461-ZDK-003	KNOB, RECOIL STARTER --------	-	1	--------	--------	QD1,QH1,QHB1,QHKR,QHT,QMPB,QX1,QX3,SD1,SH1,SHW,VX1,VX3
13	28462-ZDK-003	ROPE, RECOIL STARTER --------	-	1	--------	--------	QD1,QH1,QHB1,QHKR,QHT,QMPB,QX1,QX3,SD1,SH1,SHW,VX1,VX3
15	90003-ZDK-003	SCREW, SETTING ----------	-	1	--------	--------	QD1,QH1,QHB1,QHKR,QHT,QMPB,QX1,QX3,SD1,SH1,SHW,VX1,VX3
16	95701-06025-00	BOLT, FLANGE, 6X25 ----------	-	3	--------	--------	QD1,QH1,QHB1,QHKR,QHT,QMPB,QX1,QX3,SD1,SH1,SHW,VX1,VX3

RECOIL STARTER(3)(COUNTER ROTATION)

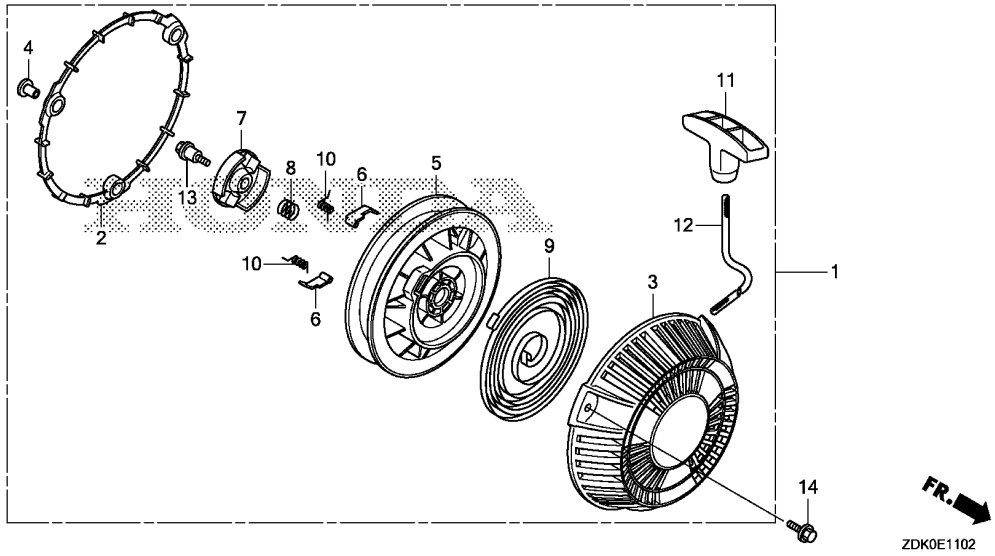

Ref. No.	L.O.N.	(Relative ref. Number) Description	F.R.T.
1	1121B9	STARTER, RECOIL ----------	0.1
5	1121B1	REEL, RECOIL STARTER ---------	0.3
6		(10)	
	1121B0	STARTER RATCHET AND/OR SPRING	0.2
		.NOTE: Same time for two units	
7		(8)	
	1121A4	GUIDE, RATCHET ----------	0.2
9	1121B7	SPRING, RECOIL STARTER RETURN	0.3
11	1121A3	GRIP, RECOIL STARTER ---------	0.1
12	1121B3	ROPE, RECOIL STARTER ---------	0.3

Ref. No.	Part No.	Description	Reqd. QTY GP 160 H	Reqd. QTY GP 200 H	Serial No.		Parts catalogue code
1	28400-ZDK-681	STARTER ASSY., RECOIL -------	1	1	--------	--------	CH1,CHJ,CHJ1,CHK,CHW,DHT
2	28405-ZDL-003	SPACER, RECOIL STARTER MOUNTING	1	1	--------	--------	CH1,CHJ,CHJ1,CHK,CHW,DHT
3	28414-ZDK-681	CASE, RECOIL STARTER --------	1	1	--------	--------	CH1,CHJ,CHJ1,CHK,CHW,DHT
4	28417-ZDL-003	COLLAR, RECOIL STARTER ------	3	3	--------	--------	CH1,CHJ,CHJ1,CHK,CHW,DHT
5	28421-ZDK-681	REEL, RECOIL STARTER --------	1	1	--------	--------	CH1,CHJ,CHJ1,CHK,CHW,DHT
6	28422-ZDK-681	RATCHET, STARTER ----------	2	2	--------	--------	CH1,CHJ,CHJ1,CHK,CHW,DHT
7	28433-ZDK-681	GUIDE, RATCHET ----------	1	1	--------	--------	CH1,CHJ,CHJ1,CHK,CHW,DHT
8	28441-ZDK-003	SPRING, FRICTION ----------	1	1	--------	--------	CH1,CHJ,CHJ1,CHK,CHW,DHT
9	28442-ZDK-003	SPRING, RECOIL STARTER ------	1	1	--------	--------	CH1,CHJ,CHJ1,CHK,CHW,DHT
10	28443-ZDK-681	SPRING, RETURN ----------	2	2	--------	--------	CH1,CHJ,CHJ1,CHK,CHW,DHT
11	28461-ZDK-003	KNOB, RECOIL STARTER --------	1	1	--------	--------	CH1,CHJ,CHJ1,CHK,CHW,DHT
12	28462-ZDK-003	ROPE, RECOIL STARTER --------	1	1	--------	--------	CH1,CHJ,CHJ1,CHK,CHW,DHT
13	90003-ZDK-003	SCREW, SETTING ----------	1	1	--------	--------	CH1,CHJ,CHJ1,CHK,CHW,DHT
14	95701-06025-00	BOLT, FLANGE, 6X25 ----------	3	3	--------	--------	CH1,CHJ,CHJ1,CHK,CHW,DHT

FAN COVER

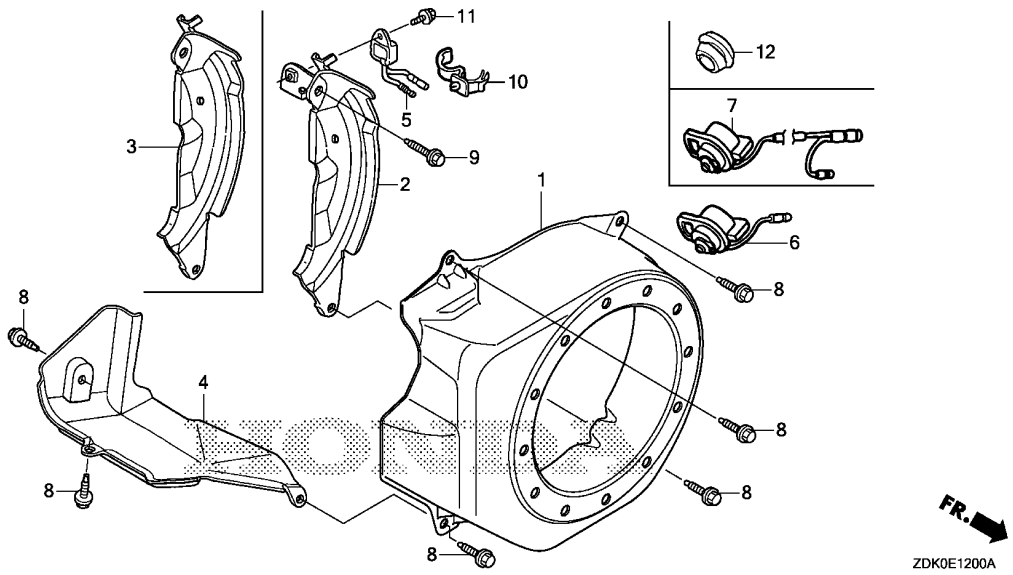

Ref. No.	L.O.N.	(Relative ref. Number) Description	F.R.T.
1	1141G8	COVER, ENGINE COOLING FAN ----	0.2
2		(3)	
	1121A7	PLATE, SIDE ----------	0.3
4	4141E3	SHROUD, ENGINE ----------	0.2
5	6151A0	ALERT UNIT, ENGINE OIL -------	0.1
6		(7)	
	6151D9	SWITCH, ENGINE STOP ---------	0.2

Ref. No.	Part No.	Description	Reqd. QTY GP 160 H	Reqd. QTY GP 200 H	Serial No.	Parts catalogue code
1	19610-ZDK-680ZA	COVER COMP., FAN				
		NH31.....MCKINLEY WHITE	1	1	-------- --------	CH1,CHJ,CHJ1,CHK,CHW,DHT
	19610-ZDK-000ZA	*NH31*.....MCKINLEY WHITE	1	1	-------- --------	PMB1,QD1,QH1,QHB1,QHKR,QHT,QMPB,QX1,QX3,SD1,SH1,SHW,VH1,VX1,VX3,WH1 WHJ,WHW
2	19611-ZH8-810	PLATE COMP., SIDE(OIL ALERT)	1	1	-------- --------	QX1,QX3,VX1,VX3
3	19612-ZH8-000	PLATE, SIDE(STD.) ----------	1	1	-------- --------	CH1,CHJ,CHJ1,CHK,CHW,DHT,PMB1,QD1,QH1,QHB1,QHKR,QHT,QMPB,SD1,SH1,SHW VH1,WH1,WHJ,WHW
4	19631-ZDK-000	SHROUD ----------	1	1		
5	34150-ZH7-023	ALERT UNIT, OIL ----------	1	1	-------- --------	QX1,QX3,VX1,VX3
6	35120-Z0D-V81	SWITCH ASSY., ENGINE STOP ---	1	1	-------- --------	CH1,CHJ,CHJ1,CHK,CHW,DHT,PMB1,QD1,QH1,QHT,SD1,SH1,SHW,VH1,WH1,WHJ,WHW
7	36100-ZF6-P82	SWITCH ASSY., ENGINE STOP ---	1	1	-------- --------	QX1,QX3,VX1,VX3
8	90013-883-000	BOLT, FLANGE, 6X12(CT200) ---	6	6		
9	90022-888-010	BOLT, FLANGE, 6X20(CT200) ---	1	1		
10	90601-Z1T-003	CLIP, HARNESS ----------	1	1	-------- --------	QX1,QX3,VX1,VX3
11	95701-06008-00	BOLT, FLANGE, 6X8 ----------	1	1	-------- --------	QX1,QX3,VX1,VX3
12	81329-567-020	GROMMET, DRAIN HOLE ---------	1	1	-------- --------	QHB1,QHKR,QMPB

CARBURETOR

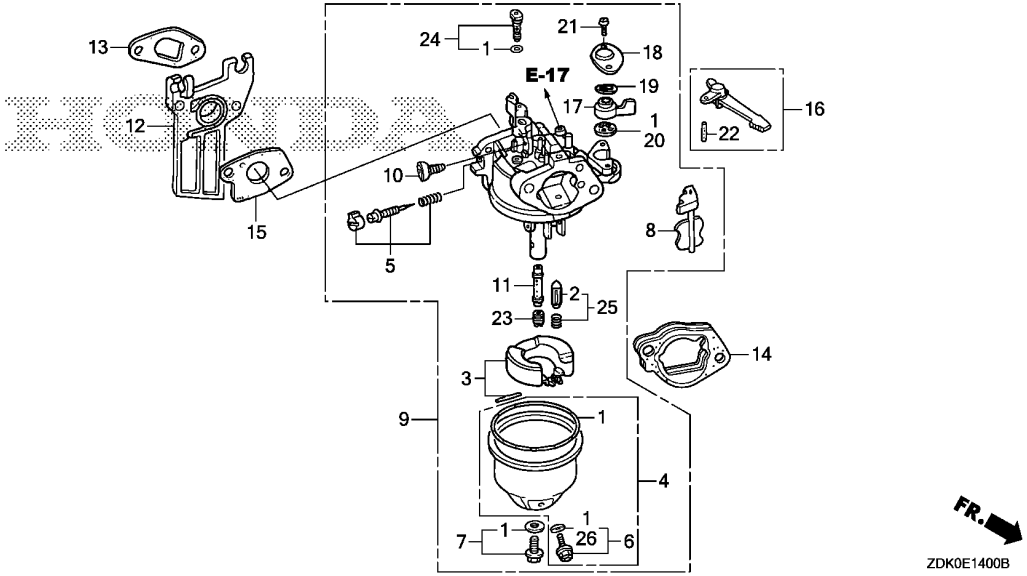

Ref. No.	L.O.N.	(Relative ref. Number) Description	F.R.T.
1	3111B1	GASKET SET, CARBURETOR ·····	0.3
2		(3,25)	
	3111E1	FLOAT VALVE SET AND/OR FLOAT SET ·····	0.3
4	3111A3	FLOAT CHAMBER SET AND/OR GASKET ·····	0.2
5	3111D7	SCREW SET, PILOT ·····	0.2
9	3111F3	CARBURETOR ·····	0.2
12		(13)	
	3111C0	CARBURETOR INSULATOR AND/OR PACKING ·····	0.2
14	3111D9	SPACER, CARBURETOR ·····	0.1
15	3111C8	PACKING, CARBURETOR ·····	0.2
16	8101F9	LEVER, CARBURETOR CHOKE ·····	0.2
20		(17,18,19)	
	3101C5	PACKING, FUEL COCK ·····	0.2
23		(11)	
	3111C3	JET, MAIN ·····	0.3

Ref. No.	Part No.	Description	Reqd. QTY GP 160 H	Reqd. QTY GP 200 H	Serial No.	Parts catalogue code
1	16010-ZE0-025	GASKET SET ·····	1	1		
2	16011-Z1T-711	VALVE SET, FLOAT ·····	1	-		
3	16013-Z1T-711	FLOAT SET ·····	1	-		
	16013-Z0S-B01	·····	-	1		
4	16015-ZE0-831	CHAMBER SET, FLOAT ·····	1	1		
5	16016-ZH7-W01	SCREW SET, PILOT ·····	1	1		
6	16024-ZE1-811	SCREW SET, DRAIN ·····	1	1		
7	16028-ZE0-005	SCREW SET ·····	1	1		
8	16044-ZE0-005	CHOKE SET ·····	1	-		
	16044-Z4M-911	·····	-	1		
9	16100-ZDK-003	CARBURETOR ASSY.(BEA2F A) ···	1	-		
	16100-ZDL-801	CARBURETOR ASSY.(BE69G A) ···	-	1	-------- --------	CH1,CHJ,CHJ1,CHK,CHW,DHT,QH1,QHB1,QHKR,QHT,QMPB,QX1,QX3,SH1,SHW,VX1 VX3
	16100-ZDL-003	CARBURETOR ASSY.(BE69F A) ···	-	1	-------- --------	QD1,SD1
10	16124-ZE0-005	SCREW, THROTTLE STOP ·····	1	1		
11	16166-ZH8-W50	NOZZLE, MAIN ·····	1	-		
	16166-ZDL-801	·····	-	1	-------- --------	CH1,CHJ,CHJ1,CHK,CHW,DHT,QH1,QHB1,QHKR,QHT,QMPB,QX1,QX3,SH1,SHW,VX1 VX3
	16166-ZDL-003	·····	-	1	-------- --------	QD1,SD1
12	16211-Z1T-000	INSULATOR, CARBURETOR(JLH) ··	1	-		
	16211-ZCW-000	INSULATOR, CARBURETOR ·····	-	1		
13	16212-Z1T-701	PACKING, INSULATOR (NINGBO SIL GASKET)	1	1		
	16212-ZH8-800	PACKING, INSULATOR ·····	(1)	(1)		
14	16220-ZE1-020	SPACER COMP., CARBURETOR ····	1	1		
15	16221-Z1T-701	PACKING, CARBURETOR (NINGBO SIL GASKET)	1	1		

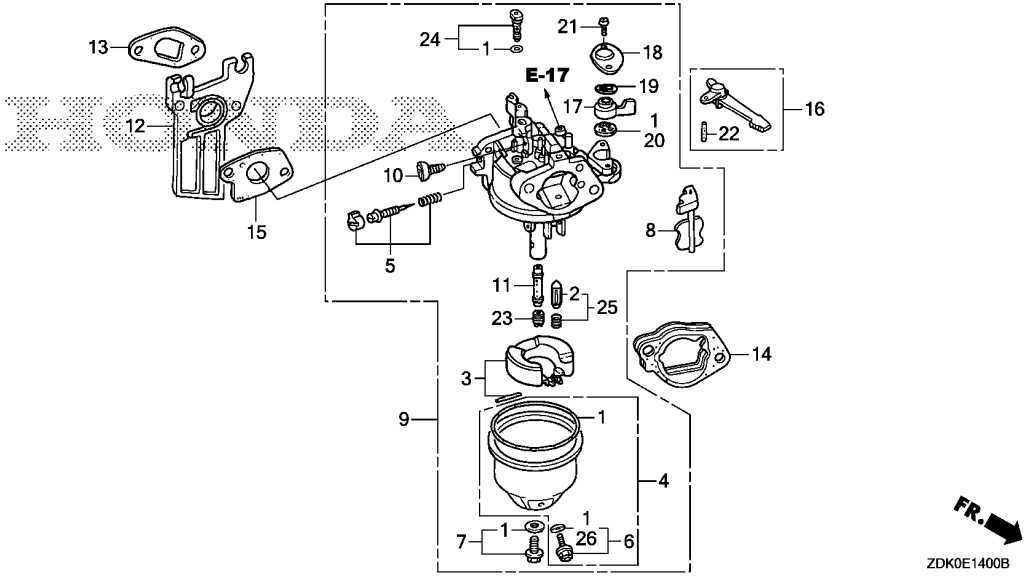

Ref. No.	Part No.	Description	Reqd. GP 160 H	Reqd. GP 200 H	Serial No.		Parts catalogue code
15)	16221-ZH8-801	PACKING, CARBURETOR	(1)	(1)			
16	16610-Z1T-000	LEVER COMP., CHOKE(STD.)	1	1			
17	16953-ZE1-812	LEVER, COCK	1	1			
18	16954-ZE1-812	PLATE, LEVER SETTING	1	1			
19	16956-ZE1-811	SPRING, COCK LEVER	1	1			
20	16957-ZE1-812	PACKING, FUEL COCK	1	1			
21	93500-03006-1H	SCREW, PAN, 3X6	2	2			
22	94305-20122	PIN, SPRING, 2X12	1	1			
23	99101-ZH8-0680	JET, MAIN, #68	(1)	-			
	99101-ZH8-0700	JET, MAIN, #70	(1)	-			
	99101-ZH8-0720	JET, MAIN, #72	1	-			
			-	(1)			
	99101-ZH8-0750	JET, MAIN, #75	-	(1)	--------	--------	CH1,CHJ,CHJ1,CHK,CHW,DHT,QH1,QHB1,QHKR,QHT,QMPB,QX1,QX3,SH1,SHW,VX1 VX3
	99101-ZH8-0780	JET, MAIN, #78	-	1	--------	--------	CH1,CHJ,CHJ1,CHK,CHW,DHT,QH1,QHB1,QHKR,QHT,QMPB,QX1,QX3,SH1,SHW,VX1 VX3
	99101-ZH8-0700	JET, MAIN, #70	-	(1)	--------	--------	QD1,SD1
	99101-ZH8-0750	JET, MAIN, #75	-	1	--------	--------	QD1,SD1
24	99204-ZE0-0350	JET SET, PILOT, #35	1	-			
	99204-ZE2-0400	JET SET, PILOT, #40	-	1			
25	16011-ZE0-005	VALVE SET, FLOAT	-	1			
26	16141-Z0S-003	WASHER, PLAIN	(1)	(1)	--------	--------	QHT,SHW,WHW

AIR CLEANER(DUAL)

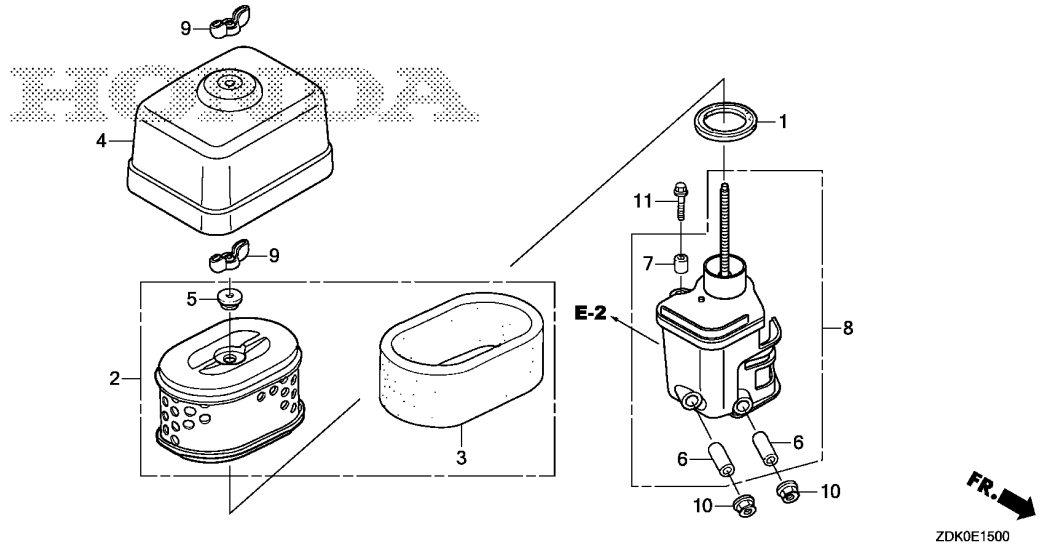

Ref. No.	L.O.N.	(Relative ref. Number) Description	F.R.T.
1	3121E1	PACKING, ELBOW ·····	0.1
2	3121B8	ELEMENT, AIR CLEANER ····· .INCLUDES: Air cleaner element -inspection	0.1
3	3121C1	FILTER, OUTER ····· .INCLUDES: Outer filter-inspection	0.1
8	3121B4	ELBOW, AIR CLEANER ·····	0.1

Ref. No.	Part No.	Description	Reqd. QTY GP 160 H	Reqd. QTY GP 200 H	Serial No.	Parts catalogue code
1	16271-ZE1-000	PACKING, ELBOW ·····	1	1	-------- --------	CH1,CHJ,CHJ1,CHK,CHW,DHT,PMB1,QH1,QHB1,QHKR,QHT,QMPB,QX1,QX3,SH1,SHW VH1,VX1,VX3,WH1,WHJ,WHW
2	17210-ZE1-822	ELEMENT, AIR CLEANER(DUAL) ··	1	1	-------- --------	CH1,CHJ,CHJ1,CHK,CHW,DHT,PMB1,QH1,QHB1,QHKR,QHT,QMPB,QX1,QX3,SH1,SHW VH1,VX1,VX3,WH1,WHJ,WHW
3	17218-ZE1-821	FILTER, OUTER ·····	1	1	-------- --------	CH1,CHJ,CHJ1,CHK,CHW,DHT,PMB1,QH1,QHB1,QHKR,QHT,QMPB,QX1,QX3,SH1,SHW VH1,VX1,VX3,WH1,WHJ,WHW
4	17231-ZDK-820	COVER, AIR CLEANER ·····	1	1	-------- --------	CH1,CHJ,CHJ1,CHK,CHW,DHT,PMB1,QH1,QHB1,QHKR,QHT,QMPB,QX1,QX3,SH1,SHW VH1,VX1,VX3,WH1,WHJ,WHW
5	17232-891-000	GROMMET, AIR CLEANER ·····	1	1	-------- --------	CH1,CHJ,CHJ1,CHK,CHW,DHT,PMB1,QH1,QHB1,QHKR,QHT,QMPB,QX1,QX3,SH1,SHW VH1,VX1,VX3,WH1,WHJ,WHW
6	17238-ZE7-010	COLLAR, AIR CLEANER ·····	2	2	-------- --------	CH1,CHJ,CHJ1,CHK,CHW,DHT,PMB1,QH1,QHB1,QHKR,QHT,QMPB,QX1,QX3,SH1,SHW VH1,VX1,VX3,WH1,WHJ,WHW
7	17239-ZE1-000	COLLAR B, AIR CLEANER ·····	1	1	-------- --------	CH1,CHJ,CHJ1,CHK,CHW,DHT,PMB1,QH1,QHB1,QHKR,QHT,QMPB,QX1,QX3,SH1,SHW VH1,VX1,VX3,WH1,WHJ,WHW
8	17410-ZDK-000	ELBOW COMP., AIR CLEANER ····	1	1	-------- --------	CH1,CHJ,CHJ1,CHK,CHW,DHT,PMB1,QH1,QHB1,QHKR,QHT,QMPB,QX1,QX3,SH1,SHW VH1,VX1,VX3,WH1,WHJ,WHW
9	90325-044-000	NUT, TOOL BOX SETTING ·····	2	2	-------- --------	CH1,CHJ,CHJ1,CHK,CHW,DHT,PMB1,QH1,QHB1,QHKR,QHT,QMPB,QX1,QX3,SH1,SHW VH1,VX1,VX3,WH1,WHJ,WHW
10	94050-06000	NUT, FLANGE, 6MM ·····	2	2	-------- --------	CH1,CHJ,CHJ1,CHK,CHW,DHT,PMB1,QH1,QHB1,QHKR,QHT,QMPB,QX1,QX3,SH1,SHW VH1,VX1,VX3,WH1,WHJ,WHW
11	95701-06020-00	BOLT, FLANGE, 6X20 ·····	1	1	-------- --------	CH1,CHJ,CHJ1,CHK,CHW,DHT,PMB1,QH1,QHB1,QHKR,QHT,QMPB,QX1,QX3,SH1,SHW VH1,VX1,VX3,WH1,WHJ,WHW

E-15-1 AIR CLEANER(SEMI DRY)

E 1

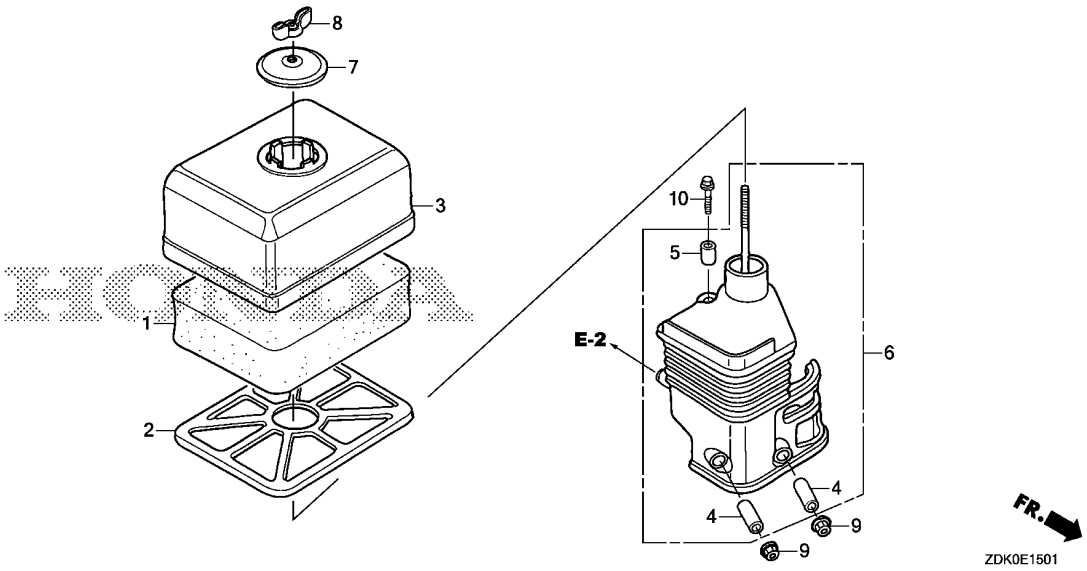

Ref. No.	L.O.N.	(Relative ref. Number) Description	F.R.T.
1	3121B8	ELEMENT, AIR CLEANER ····· .INCLUDES: Air cleaner element -inspection	0.1
6	3121B4	ELBOW, AIR CLEANER ·····	0.1

Ref. No.	Part No.	Description	Reqd. GP 160 H	Reqd. GP 200 H	Serial No.		Parts catalogue code
1	17211-ZE1-000	ELEMENT, AIR CLEANER(SEMI DRY)	1	1	--------	--------	QD1,SD1
2	17212-ZE1-000	GRID, AIR CLEANER(SEMI DRY) ·	1	1	--------	--------	QD1,SD1
3	17231-ZE1-000	COVER, AIR CLEANER(SEMI DRY)	1	1	--------	--------	QD1,SD1
4	17238-ZE7-010	COLLAR, AIR CLEANER ·····	2	2	--------	--------	QD1,SD1
5	17239-ZE1-000	COLLAR B, AIR CLEANER ·····	1	1	--------	--------	QD1,SD1
6	17410-Z1T-010	ELBOW COMP., AIR CLEANER ····	1	1	--------	--------	QD1,SD1
7	17421-ZE1-000	CAP, CLEANER ·····	1	1	--------	--------	QD1,SD1
8	90325-044-000	NUT, TOOL BOX SETTING ·····	1	1	--------	--------	QD1,SD1
9	94050-06000	NUT, FLANGE, 6MM ·····	2	2	--------	--------	QD1,SD1
10	95701-06020-00	BOLT, FLANGE, 6X20 ·····	1	1	--------	--------	QD1,SD1

2

MUFFLER

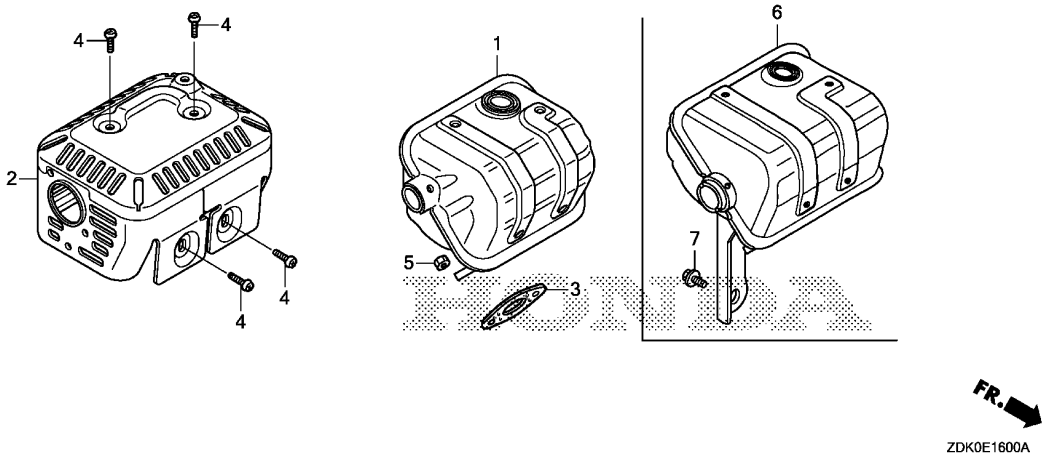

Ref. No.	L.O.N.	(Relative ref. Number) Description	F.R.T.
1		(6)	
	3131C5	MUFFLER, EXHAUST ----------	0.2
2	3131D5	PROTECTOR, EXHAUST MUFFLER :UPPER ----------	0.2
3	3131B4	GASKET, EXHAUST MUFFLER ------	0.2

Ref. No.	Part No.	Description	Reqd. QTY GP 160 H	Reqd. QTY GP 200 H	Serial No.	Parts catalogue code
1	18310-ZDK-000	MUFFLER COMP. ----------	1	-		
2	18320-ZDK-000	PROTECTOR COMP., MUFFLER ----	1	-		
	18320-ZDL-000	----------	-	1		
3	18381-Z1T-003	GASKET, MUFFLER (GUANGZHOU LEAKLESS)	(1)	(1)		
	18381-Z1T-701	GASKET, MUFFLER (NINGBO SIL GASKET)	1	1		
4	90050-ZE1-000	SCREW, TAPPING, 5X8 ---------	4	4		
5	94001-08000-0S	NUT, HEX., 8MM ----------	2	2		
6	18310-ZDL-000	MUFFLER COMP. ----------	-	1		
7	90016-ZE1-000	BOLT, FLANGE, 6X13(CT200) ---	-	1		

FUEL TANK

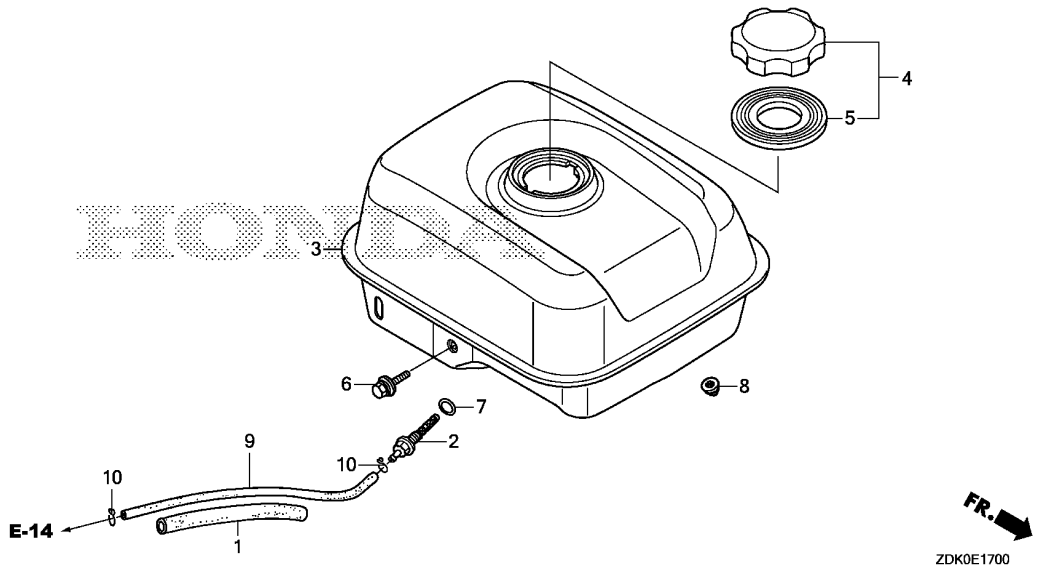

Ref. No.	L.O.N.	(Relative ref. Number) Description	F.R.T.
2		(7)	
	3101H6	JOINT, FUEL STRAINER ·····	0.2
3	3101H7	TANK, FUEL ·····	0.2
4		(5)	
	3101M7	CAP, FUEL FILLER ·····	0.1
9	3101F1	TUBE, FUEL TANK ·····	0.2

Ref. No.	Part No.	Description	Reqd. QTY GP 160 H	Reqd. QTY GP 200 H	Serial No.	Parts catalogue code
1	16854-ZH8-000	RUBBER, SUPPORTER(107MM) ····	1	1		
2	16955-Z1T-010	JOINT, FUEL TANK ·····	1	1		
3	17510-ZDK-000ZA	TANK COMP., FUEL *NH31*.....MCKINLEY WHITE	1	1		
4	17620-Z1T-800	CAP COMP., FUEL FILLER (CHROME PLATED)(TOYOSHA)	1	1		
5	17631-Z1T-800	PACKING, FUEL FILLER CAP (39X62X3)(TOYOSHA)	1	1		
6	90004-Z1T-000	BOLT, FLANGE, 6X29 ·····	1	-		
	90004-ZCW-000	BOLT, FLANGE, 6X34 ·····	-	1		
7	91353-671-004	O-RING, 14MM(NOK) ·····	1	1		
8	94050-06000	NUT, FLANGE, 6MM ·····	2	2		
9	95001-45140-40	TUBE, FUEL, 4.5X140 (95001-45001-60M)	1	-		
	95001-45145-40	TUBE, FUEL, 4.5X145 (95001-45001-60M)	-	1		
10	95002-02080	CLIP, TUBE(B8) ·····	2	2		

FLYWHEEL

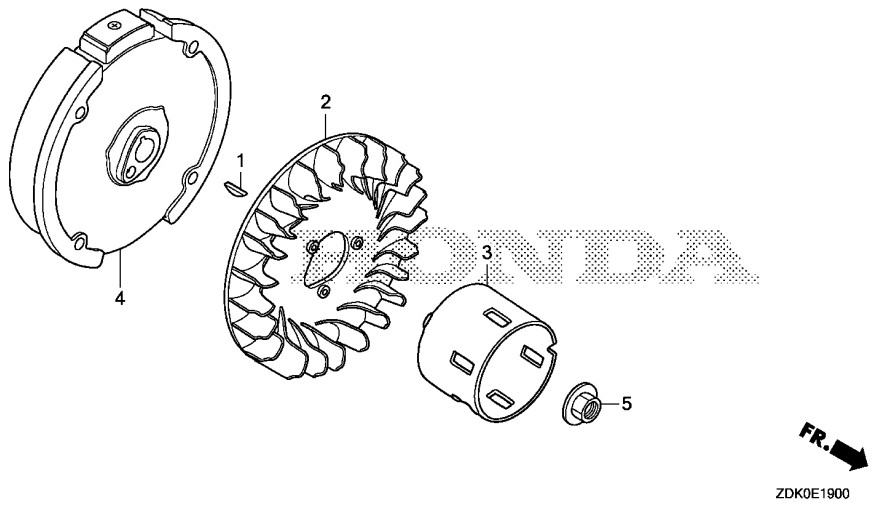

Ref. No.	L.O.N.	(Relative ref. Number) Description	F.R.T.
2	1141G7	FAN, ENGINE COOLING ----------	0.2
3	1121A9	PULLEY, RECOIL STARTER -------	0.2
4	2161B5	FLYWHEEL ----------	0.3

Ref. No.	Part No.	Description	Reqd. QTY GP 160 H	Reqd. QTY GP 200 H	Serial No.	Parts catalogue code
1	13331-357-000	KEY, SPECIAL WOODRUFF, 25X18	1	1		
2	19511-ZDK-680	FAN, COOLING ----------	1	1	-------- --------	CH1,CHJ,CHJ1,CHK,CHW,DHT
	19511-Z1T-000	----------	1	1	-------- --------	PMB1,QD1,QH1,QHB1,QHKR,QHT,QMPB,QX1,QX3,SD1,SH1,SHW,VH1,VX1,VX3,WH1 WHJ,WHW
3	28451-ZDL-003	PULLEY, STARTER ----------	1	-	-------- --------	CH1,CHJ,CHJ1,CHK,CHW,DHT
	28451-ZDK-003	----------	1	-	-------- --------	PMB1,QD1,QH1,QHB1,QHKR,QHT,QMPB,QX1,QX3,SD1,SH1,SHW,VH1,VX1,VX3,WH1 WHJ,WHW
	28451-ZDL-003	----------	-	1		
4	31110-ZDK-681	FLYWHEEL COMP. ----------	1	-	-------- --------	CH1,CHJ,CHJ1,CHK,CHW,DHT
	31110-Z1T-004	FLYWHEEL COMP.(YUXIN) -------	1	-	-------- --------	PMB1,QD1,QH1,QHB1,QHKR,QHT,QMPB,QX1,QX3,SD1,SH1,SHW,VH1,VX1,VX3,WH1 WHJ,WHW
	31110-ZDL-681	FLYWHEEL COMP. ----------	-	1	-------- --------	CH1,CHJ,CHJ1,CHK,CHW,DHT
	31110-Z1V-003	----------	-	1	-------- --------	QD1,QH1,QHB1,QHKR,QHT,QMPB,QX1,QX3,SD1,SH1,SHW,VX1,VX3
5	90201-Z1T-000	NUT, SPECIAL, 14MM ----------	1	1		

IGNITION COIL

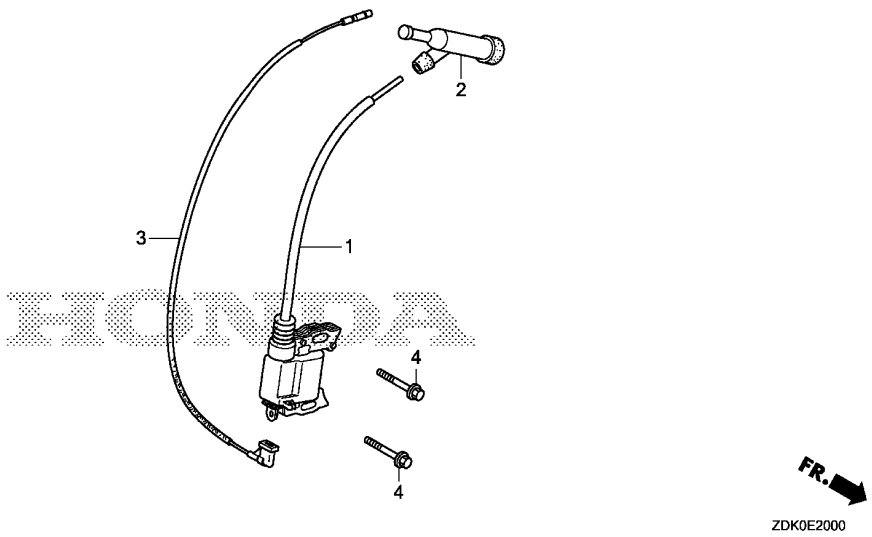

Ref. No.	L.O.N.	(Relative ref. Number) Description	F.R.T.
1	6141A5	COIL, IGNITION(ONE) ----------	0.2
2	6141B8	TERMINAL, HIGH TENSION -------	0.1
3	6111B3	CORD, STOP SWITCH ----------	0.3

Ref. No.	Part No.	Description	Reqd. QTY GP 160 H	Reqd. QTY GP 200 H	Serial No.	Parts catalogue code
1	30500-ZDK-004	COIL ASSY., IGNITION --------	1	1		
2	30700-ZDK-004	CAP ASSY., NOISE SUPPRESSOR -	1	1		
3	32195-ZDK-004	CORD, STOP SWITCH ----------	1	1		
4	90121-952-000	BOLT, FLANGE, 6X25(CT200) ---	2	2		

CONTROL

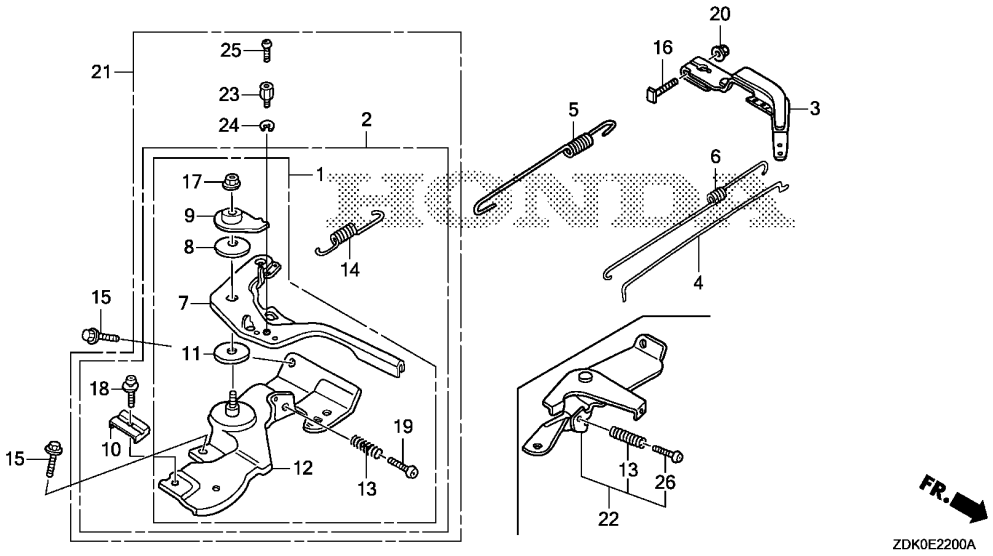

Ref. No.	L.O.N.	(Relative ref. Number) Description	F.R.T.
1		(2,21,22)	
	1161A5	CONTROL, THROTTLE/GOVERNOR ---	0.2
3	1161A0	ARM, GOVERNOR ----------	0.2
4	1161B1	ROD, GOVERNOR ----------	0.3
5	1161C5	SPRING, GOVERNOR ----------	0.2
6	1161C2	SPRING, THROTTLE RETURN ------	0.3
7	1161A8	LEVER, CONTROL ----------	0.3
12	1161A2	BASE, CONTROL ----------	0.3
14	1161B7	SPRING, CABLE RETURN ---------	0.2

Ref. No.	Part No.	Description	Reqd. QTY GP 160 H	Reqd. QTY GP 200 H	Serial No.	Parts catalogue code
1	16500-Z1T-000	CONTROL ASSY. ----------	1	1	-------- --------	PMB1,VH1,VX1,WH1,WHJ,WHW
2	16500-Z1T-600	CONTROL ASSY.(REMOTE) -------	1	1	-------- --------	CH1,CHJ,CHJ1,CHK,CHW,DHT,QD1,QH1,QHT,QX1,QX3,SD1,SH1,SHW
3	16551-ZE0-010	ARM, GOVERNOR ----------	1	-		
	16551-ZL0-000	----------	-	1		
4	16555-ZE1-000	ROD, GOVERNOR ----------	1	1		
5	16561-ZDK-000	SPRING, GOVERNOR ----------	1	-	-------- --------	CH1,CHJ,CHJ1,CHK,CHW,DHT,QHB1,QHKR,QHT,QMPB,QX3,SHW,WHJ,WHW
	16561-ZE1-020	----------	1	-	-------- --------	PMB1,QD1,QH1,QX1,SD1,SH1,VH1,VX1,WH1
	16561-ZDK-690	----------	1	-	-------- --------	VX3
	16561-ZDL-000	----------	-	1	-------- --------	CH1,CHJ,CHJ1,CHK,CHW,DHT,QD1,QH1,QHB1,QHKR,QHT,QMPB,QX1,QX3,SD1,SH1 SHW,VX1
	16561-ZDL-690	----------	-	1	-------- --------	VX3
6	16562-ZE1-020	SPRING, THROTTLE RETURN -----	1	1		
7	16571-Z1T-000	LEVER, CONTROL ----------	1	1	-------- --------	CH1,CHJ,CHJ1,CHK,CHW,DHT,PMB1,QD1,QH1,QHB1,QHKR,QHT,QMPB,QX1,QX3,SD1 SH1,SHW,VH1,VX1,WH1,WHJ,WHW
8	16574-ZE1-000	SPRING, LEVER ----------	1	1	-------- --------	CH1,CHJ,CHJ1,CHK,CHW,DHT,PMB1,QD1,QH1,QHB1,QHKR,QHT,QMPB,QX1,QX3,SD1 SH1,SHW,VH1,VX1,WH1,WHJ,WHW
9	16575-ZH8-000	WASHER, CONTROL LEVER -------	1	1	-------- --------	CH1,CHJ,CHJ1,CHK,CHW,DHT,PMB1,QD1,QH1,QHB1,QHKR,QHT,QMPB,QX1,QX3,SD1 SH1,SHW,VH1,VX1,WH1,WHJ,WHW
10	16576-891-000	HOLDER, CABLE ----------	1	1	-------- --------	CH1,CHJ,CHJ1,CHK,CHW,DHT,QD1,QH1,QHB1,QHKR,QHT,QMPB,QX1,QX3,SD1,SH1 SHW
11	16578-ZE1-000	SPACER, CONTROL LEVER -------	1	1	-------- --------	CH1,CHJ,CHJ1,CHK,CHW,DHT,PMB1,QD1,QH1,QHB1,QHKR,QHT,QMPB,QX1,QX3,SD1 SH1,SHW,VH1,VX1,WH1,WHJ,WHW
12	16580-ZH8-813	BASE COMP., CONTROL(REMOTE) -	1	1	-------- --------	CH1,CHJ,CHJ1,CHK,CHW,DHT,QD1,QH1,QHB1,QHKR,QHT,QMPB,QX1,QX3,SD1,SH1 SHW
	16580-ZH8-030	BASE COMP., CONTROL ---------	1	1	-------- --------	PMB1,VH1,VX1,WH1,WHJ,WHW
13	16584-883-300	SPRING, CONTROL ADJUSTING ---	1	1		

CONTROL

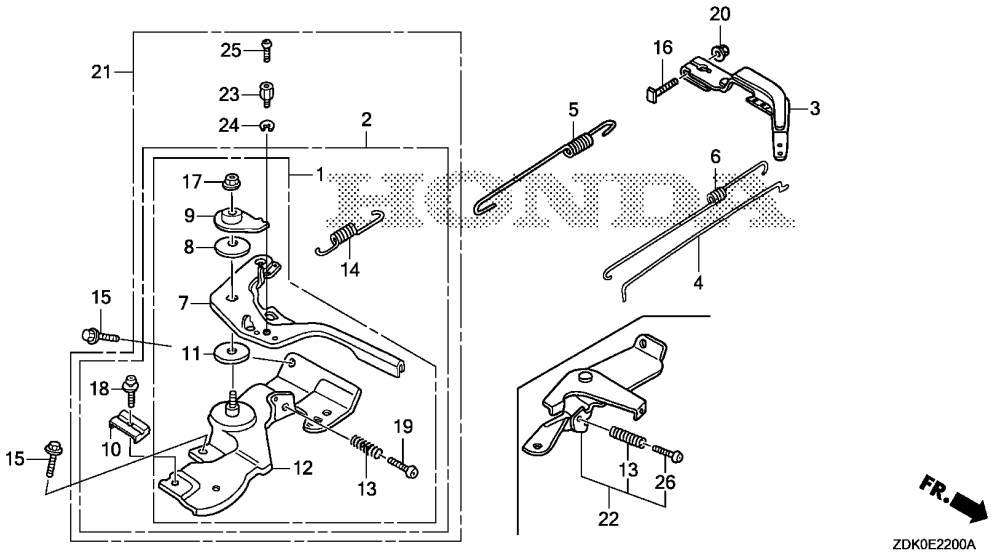

Ref. No.	Part No.	Description	Reqd. QTY GP 160 H	Reqd. QTY GP 200 H	Serial No.	Parts catalogue code
14	16592-ZE1-810	SPRING, CABLE RETURN	1	1	-------- --------	CH1,CHJ,CHJ1,CHK,CHW,DHT,QD1,QH1,QHB1,QHKR,QHT,QMPB,QX1,QX3,SD1,SH1 SHW
15	90013-883-000	BOLT, FLANGE, 6X12(CT200) ...	2	2		
16	90015-ZE5-010	BOLT, GOVERNOR ARM	1	1		
17	90114-SA0-000	NUT, SELF-LOCK, 6MM	1	1	-------- --------	CH1,CHJ,CHJ1,CHK,CHW,DHT,PMB1,QD1,QH1,QHB1,QHKR,QHT,QMPB,QX1,QX3,SD1 SH1,SHW,VH1,VX1,WH1,WHJ,WHW
	90202-Z1T-000	.....	1	1	-------- --------	CH1,CHJ,CHJ1,CHK,CHW,DHT,PMB1,QD1,QH1,QHB1,QHKR,QHT,QMPB,QX1,QX3,SD1 SH1,SHW,VH1,VX1,WH1,WHJ,WHW
18	93500-05016-0A	SCREW, PAN, 5X16	1	1	-------- --------	CH1,CHJ,CHJ1,CHK,CHW,DHT,QD1,QH1,QHB1,QHKR,QHT,QMPB,QX1,QX3,SD1,SH1 SHW
19	93500-05025-0H	SCREW, PAN, 5X25	1	1	-------- --------	CH1,CHJ,CHJ1,CHK,CHW,DHT,QD1,QH1,QHB1,QHKR,QHT,QMPB,QX1,QX3,SD1,SH1 SHW
	93500-05025-0A	.....	1	1	-------- --------	PMB1,VH1,VX1,WH1,WHJ,WHW
20	94050-06000	NUT, FLANGE, 6MM	1	1		
21	16500-Z1T-610	CONTROL ASSY.(REMOTE/INTERNAL)	1	1	-------- --------	QHB1,QHKR,QMPB
22	16570-ZB2-000	CONTROL ASSY.	1	1	-------- --------	VX3
23	16594-883-010	HOLDER, WIRE	1	1	-------- --------	QHB1,QHKR,QMPB
24	90605-Z1T-000	CIRCLIP, 5MM	1	1	-------- --------	QHB1,QHKR,QMPB
25	93500-04006-0H	SCREW, PAN, 4X6	1	1	-------- --------	QHB1,QHKR,QMPB
26	93500-05035-0A	SCREW, PAN, 5X35	1	1	-------- --------	VX3

LABEL

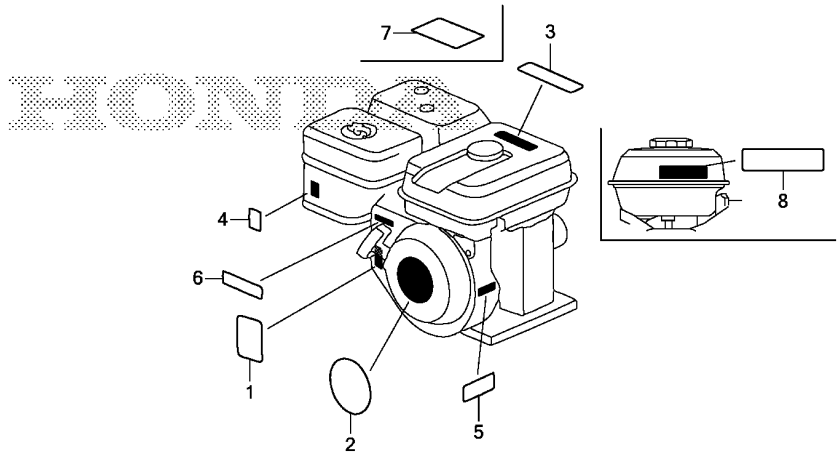

ZDK0E2800A

Ref. No.	L.O.N.	(Relative ref. Number) Description	F.R.T.
		NO INFORMATION ----------	

Ref. No.	Part No.	Description	Reqd. QTY GP 160 H	Reqd. QTY GP 200 H	Serial No.		Parts catalogue code
1	87114-ZH7-000	LABEL, WARNING (NOT CERTIFIED FOR SALE)	1	1	--------	--------	CH1,CHJ,CHJ1,CHK,CHW,DHT,PMB1,QD1,QH1,QHT,QX1,SD1,SH1,SHW,VH1,VX1,WH1 WHJ,WHW
	87114-ZH7-850	LABEL, WARNING ----------	1	1	--------	--------	QHB1,QHKR,QMPB,QX3,VX3
2	87521-ZDK-000	EMBLEM(GP160) ----------	1	-			
	87521-ZDL-000	EMBLEM ----------	-	1			
3	87522-Z1T-G21	LABEL, CAUTION ----------	1	1	--------	--------	CH1,PMB1,QD1,QH1,QX1,SD1,SH1,VH1,VX1,WH1
	87520-Z1V-000	MARK A, COMBINATION(JAPANESE)	1	1	--------	--------	CHJ,WHJ
	87516-Z1T-800	MARK, OPERATOR CAUTION ------	1	1	--------	--------	CHK
	87516-Z1V-800	----------	1	1	--------	--------	CHW,SHW,WHW
	87522-ZDK-740	LABEL, CAUTION(THAI) --------	1	1	--------	--------	DHT,QHT
4	87528-ZH7-000	MARK, CHOKE(GRAY) ----------	1	1	--------	--------	QD1,QHB1,QHKR,QMPB,QX3,SD1,VX3
5	87532-ZH8-810	MARK, OIL ALERT(ENGLISH) ----	1	1	--------	--------	QX1,QX3,VX1,VX3
6	87532-ZH8-W40	MARK, THROTTLE INDICATION ---	1	-	--------	--------	PMB1,WH1,WHJ,WHW
7	87519-Z4N-000	MARK, OPERATOR CAUTION (PICTOGRAPH)	1	1	--------	--------	CHJ1,QHB1,QHKR,QMPB,QX3,VX3
8	87526-Z1V-000	MARK B, COMBINATION(JAPANESE)	1	1	--------	--------	CHJ,WHJ

TOOL

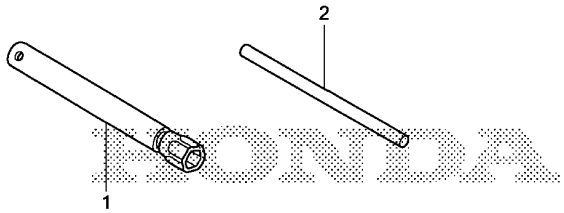

ZDK0E2900

Ref. No.	L.O.N.	(Relative ref. Number) Description	F.R.T.
		NO INFORMATION ----------	

Ref. No.	Part No.	Description	Reqd. GP 160 H	Reqd. GP 200 H	Serial No.		Parts catalogue code
1	89218-ZE1-000	WRENCH COMP., SPARK PLUG ----	1	1	--------	--------	CH1,CHJ,CHJ1,CHK,CHW,DHT,PMB1,QD1,QH1,QHT,QX1,SD1,SH1,SHW,VH1,VX1,WH1 WHJ,WHW
2	89219-805-000	HANDLE, BOX WRENCH ----------	1	-	--------	--------	CH1,CHK,CHW,DHT,QH1,QHT,QX1,SD1,SH1,SHW,VH1,VX1
			-	1	--------	--------	CH1,CHK,CHW,DHT,QD1,QH1,QHT,QX1,SD1,SH1,SHW,VX1

OTHER PARTS

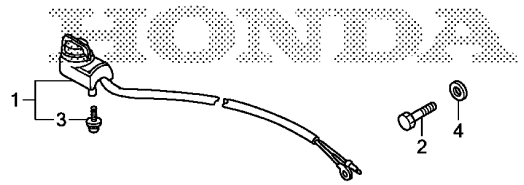

ZDK0E4000

Ref. No.	L.O.N.	(Relative ref. Number) Description	F.R.T.
		NO INFORMATION ----------	

Ref. No.	Part No.	Description	Reqd. GP 160 H	Reqd. GP 200 H	Serial No.		Parts catalogue code
1	35120-746-C21	SWITCH ASSY., ENGINE STOP ---	1	1	--------	--------	QMPB
2	90003-ZE1-000	BOLT, HEX., 5/16" ----------	1	1	--------	--------	QHKR
3	90105-733-D61	BOLT, 3X12(SEMS) ----------	1	1	--------	--------	QMPB
4	90473-842-000	WASHER, 8MM ----------	1	1	--------	--------	QHKR

EOP-1 GASKET KIT

E11

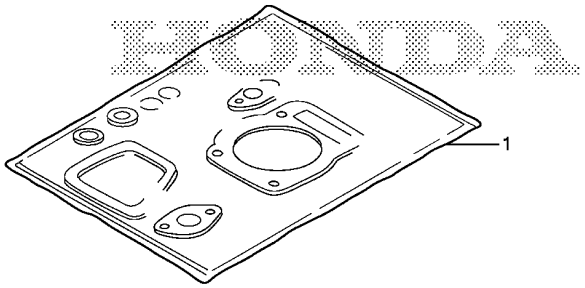

ZDK0X0100

Ref. No.	L.O.N.	(Relative ref. Number) Description	F.R.T.
		NO INFORMATION ----------	

Ref. No.	Part No.	Description	Reqd. QTY GP 160 H	Reqd. QTY GP 200 H	Serial No.	Parts catalogue code
1	06111-ZDK-000	GASKET KIT ----------	(1)	(1)		

2

PART NO. INDEX

F 1

Part Number	Address	Page	Ref.
06000			
06111-ZDK-000	E11	47	1
11000			
11300-ZDK-630	D4	24	1
11300-ZDK-640	D4	24	1
11300-ZDK-680	D4	24	9
12000			
12000-ZDK-405	D2	22	1
12000-ZDK-406	D2	22	1
12000-ZDL-405	D2	22	1
12000-ZDL-406	D2	22	1
12209-ZH8-003	D7	27	1
12210-Z1T-405	D1	21	1
12251-ZL0-003	D1	21	2
12310-ZE1-020	D1	21	3
12312-Z1T-701	D1	21	4
12391-ZE1-000	D1	21	4
13000			
13010-Z4K-004	D6	26	1
13010-Z4P-003	D6	26	1
13011-Z4K-004	D6	26	1
13011-Z4P-003	D6	26	1
13012-Z4K-004	D6	26	1
13012-Z4P-003	D6	26	1
13013-Z4K-004	D6	26	1
13013-Z4P-003	D6	26	1
13101-Z1T-010	D6	26	2
13101-ZDL-003	D6	26	2
13102-Z1T-000	D6	26	2
13102-ZDL-003	D6	26	2
13103-Z1T-000	D6	26	2
13103-ZDL-003	D6	26	2
13104-Z1T-000	D6	26	2
13104-ZDL-003	D6	26	2
13111-Z1T-000	D6	26	3
13200-Z1T-600	D6	26	4
13310-Z1T-630	D5	25	1
13310-Z1T-650	D5	25	2
13310-Z1T-670	D5	25	3
13310-Z1T-800	D5	25	4
13310-Z1T-880	D5	25	5
13310-ZCW-000	D5	25	5
13310-ZCW-600	D5	25	4
13310-ZCW-670	D5	25	3
13310-ZDK-681	D5	25	7
13310-ZDL-681	D5	25	7
13331-357-000	E4	40	1
14000			
14100-Z1T-810	D7	27	2
14100-ZDK-681	D7	27	17
14100-ZDK-751	D7	27	18
14100-ZDL-681	D7	27	17
14100-ZDL-751	D7	27	18
14100-ZL0-000	D7	27	2
14410-ZE1-010	D7	27	3
14431-ZE1-000	D7	27	4
14441-ZE1-010	D7	27	5
14451-Z7E-000	D7	27	6
14568-ZE1-000	D7	27	7
14711-ZF1-000	D7	27	8
14721-ZF1-000	D7	27	9
14731-ZL0-000	D7	27	5
14751-ZF1-000	D7	27	10
14771-ZE1-000	D7	27	11
14773-ZE1-000	D7	27	12
14781-ZE1-000	D7	27	13
14791-ZE1-010	D7	27	14
15000			
15600-Z1T-000	D4	24	2
15600-Z1T-600	D4	24	3
15625-Z1T-000	D4	24	4
15721-ZH8-000	D1	21	5
16000			
16010-ZE0-025	D14	34	1
16011-Z1T-711	D14	34	2
16011-ZE0-005	D15	35	25
16013-Z0S-B01	D14	34	3
16013-Z1T-711	D14	34	3
16015-ZE0-831	D14	34	4
16016-ZH7-W01	D14	34	5
16024-ZE1-811	D14	34	6
16028-ZE0-005	D14	34	7
16044-Z4M-911	D14	34	8
16044-ZE0-005	D14	34	8
16100-ZDK-003	D14	34	9
16100-ZDL-003	D14	34	9
16100-ZDL-801	D14	34	9
16124-ZE0-005	D14	34	10
16141-Z0S-003	D15	35	26
16166-ZDL-003	D14	34	11
16166-ZDL-801	D14	34	11
16166-ZH8-W50	D14	34	11
16211-Z1T-000	D14	34	12
16211-ZCW-000	D14	34	12
16212-Z1T-701	D14	34	13
16212-ZH8-800	D14	34	13
16220-ZE1-020	D14	34	14
16221-Z1T-701	D14	34	15
16221-ZH8-801	D15	35	15
16271-ZE1-000	D16	36	1
16500-Z1T-000	E6	42	1
16500-Z1T-600	E6	42	2
16500-Z1T-610	E7	43	21
16510-Z1T-000	D2	22	2
16510-ZDL-000	D3	23	19
16511-ZE1-000	D2	22	3
16513-ZE1-000	D2	22	4
16531-Z1T-000	D2	22	5
16541-Z1T-000	D2	22	6
16551-ZE0-010	E6	42	3
16551-ZL0-000	E6	42	3
16555-ZE1-000	E6	42	4
16561-ZDK-000	E6	42	5
16561-ZDK-690	E6	42	5
16561-ZDL-000	E6	42	5
16561-ZDL-690	E6	42	5
16561-ZE1-020	E6	42	5
16562-ZE1-020	E6	42	6
16570-ZB2-000	E7	43	22
16571-Z1T-000	E6	42	7
16574-ZE1-000	E6	42	8
16575-ZH8-000	E6	42	9
16576-891-000	E6	42	10
16578-ZE1-000	E6	42	11
16580-ZH8-030	E6	42	12
16580-ZH8-813	E6	42	12
16584-883-300	E6	42	13
16592-ZE1-810	E7	43	14
16594-883-010	E7	43	23
16610-Z1T-000	D15	35	16
16854-ZH8-000	E3	39	1
16953-ZE1-812	D15	35	17
16954-ZE1-812	D15	35	18
16955-Z1T-010	E3	39	2
16956-ZE1-811	D15	35	19
16957-ZE1-812	D15	35	20
17000			
17210-ZE1-822	D16	36	2
17211-ZE1-000	E1	37	1
17212-ZE1-000	E1	37	2
17218-ZE1-821	D16	36	3
17231-ZDK-820	D16	36	4
17231-ZE1-000	E1	37	3
17232-891-000	D16	36	5
17238-ZE7-010	D16	36	6
	E1	37	4
17239-ZE1-000	D16	36	7
	E1	37	5
17410-Z1T-010	E1	37	6
17410-ZDK-000	D16	36	8
17421-ZE1-000	E1	37	7
17510-ZDK-000ZA	E3	39	3
17620-Z1T-800	E3	39	4
17631-Z1T-800	E3	39	5
18000			
18310-ZDK-000	E2	38	1
18310-ZDL-000	E2	38	6
18320-ZDK-000	E2	38	2
18320-ZDL-000	E2	38	2
18381-Z1T-003	E2	38	3
18381-Z1T-701	E2	38	3
19000			
19511-Z1T-000	E4	40	2
19511-ZDK-680	E4	40	2
19610-ZDK-000ZA	D13	33	1
19610-ZDK-680ZA	D13	33	1
19611-ZH8-810	D13	33	2
19612-ZH8-000	D13	33	3
19631-ZDK-000	D13	33	4
28000			
28400-ZDK-003	D10	30	1
28400-ZDK-681	D12	32	1
28400-ZDL-003	D11	31	1
28405-ZDL-003	D11	31	2
	D12	32	2
28414-ZDK-003	D10	30	2
	D11	31	3
28414-ZDK-681	D12	32	3
28415-ZDK-003	D10	30	3
28417-ZDL-003	D11	31	5
	D12	32	4
28421-ZDK-003	D10	30	5
	D11	31	6
28421-ZDK-681	D12	32	5
28422-ZDK-003	D10	30	6
	D11	31	7
28422-ZDK-681	D12	32	6
28433-ZDK-003	D10	30	7
	D11	31	8
28433-ZDK-681	D12	32	7
28441-ZDK-003	D10	30	8
	D11	31	9
	D12	32	8
28442-ZDK-003	D10	30	9
	D11	31	10
	D12	32	9
28443-ZDK-003	D10	30	10
	D11	31	11
28443-ZDK-681	D12	32	10
28451-ZDK-003	E4	40	3
28451-ZDL-003	E4	40	3
28461-ZDK-003	D10	30	11
	D11	31	12
	D12	32	11
28462-ZDK-003	D10	30	12
	D11	31	13
	D12	32	12
30000			
30500-ZDK-004	E5	41	1
30700-ZDK-004	E5	41	2
31000			
31110-Z1T-004	E4	40	4
31110-Z1V-003	E4	40	4
31110-ZDK-681	E4	40	4
31110-ZDL-681	E4	40	4
32000			
32195-ZDK-004	E5	41	3
34000			
34150-ZH7-023	D13	33	5
35000			
35120-746-C21	E10	46	1
35120-Z0D-V81	D13	33	6
35480-Z0T-003	D2	22	7
36000			
36100-ZF6-P82	D13	33	7
81000			
81329-567-020	D13	33	12
87000			
87114-ZH7-000	E8	44	1
87114-ZH7-850	E8	44	1
87516-Z1T-800	E8	44	3
87516-Z1V-800	E8	44	3
87519-Z4N-000	E8	44	7
87520-Z1V-000	E8	44	3
87521-ZDK-000	E8	44	2
87521-ZDL-000	E8	44	2
87522-Z1T-G21	E8	44	3
87522-ZDK-740	E8	44	3
87526-Z1V-000	E8	44	8
87528-ZH7-000	E8	44	4
87532-ZH8-810	E8	44	5
87532-ZH8-W40	E8	44	6
89000			
89218-ZE1-000	E9	45	1
89219-805-000	E9	45	2
90000			
90001-Z1T-000	D6	26	5
90003-ZDK-003	D10	30	14
	D11	31	15
	D12	32	13
90003-ZE1-000	E10	46	2
90004-Z1T-000	E3	39	6

3

PART NO. INDEX

F 2

Part Number	Address	Page	Ref.
90004-ZCW-000	E3	39	6
90012-ZE0-010	D7	27	15
90013-883-000	D1	21	6
	D13	33	8
	E7	43	15
90015-ZE5-010	E7	43	16
90016-ZE1-000	E2	38	7
90022-888-010	D13	33	9
90043-ZDK-000	D1	21	7
90047-ZDK-000	D1	21	8
90050-ZE1-000	E2	38	4
90105-733-D61	E10	46	3
90114-SA0-000	E7	43	17
90121-952-000	E5	41	4
90131-ZE1-000	D2	22	8
90201-Z1T-000	E4	40	5
90202-Z1T-000	E7	43	17
90206-ZE1-000	D7	27	16
90325-044-000	D16	36	9
	E1	37	8
90451-Z1T-000	D2	22	9
90473-842-000	E10	46	4
90551-ZE1-000	D6	26	6
90601-Z1T-003	D13	33	10
90601-ZE1-000	D2	22	10
90602-ZE1-000	D2	22	11
90605-Z1T-000	E7	43	24
90741-883-810	D5	25	6
	D7	27	19
90745-ZE1-600	D5	25	6
	D7	27	19
91000			
91001-Z1T-003	D2	22	12
91001-ZF1-003	D2	22	12
91001-ZF1-004	D2	22	12
91202-Z1T-003	D2	22	13
	D4	24	5
91353-671-004	E3	39	7
91353-Z7E-003	D2	22	14
93000			
93500-03006-1H	D15	35	21
93500-04006-0H	E7	43	25
93500-05016-0A	E7	43	18
93500-05025-0A	E7	43	19
93500-05025-0H	E7	43	19
93500-05035-0A	E7	43	26
94000			
94001-08000-0S	E2	38	5
94050-06000	D16	36	10
	E1	37	9
	E3	39	8
	E7	43	20
94050-10000	D2	22	15
94101-06800	D2	22	16
94251-08000	D2	22	17
94301-08140	D4	24	6
94301-10160	D1	21	9
94305-20122	D15	35	22
95000			
95001-45140-40	E3	39	9
95001-45145-40	E3	39	9
95002-02080	E3	39	10
95701-06008-00	D13	33	11
95701-06012-00	D3	23	18
95701-06016-00	D10	30	15
95701-06020-00	D16	36	11
	E1	37	10
95701-06025-00	D11	31	16
	D12	32	14
95701-08032-00	D4	24	7
95701-08060-00	D1	21	10
96000			
96100-62050-00	D4	24	8
98000			
98079-56846	D1	21	11
98079-56855	D1	21	11
99000			
99101-ZH8-0680	D15	35	23
99101-ZH8-0700	D15	35	23
99101-ZH8-0720	D15	35	23
99101-ZH8-0750	D15	35	23
99101-ZH8-0780	D15	35	23
99204-ZE0-0350	D15	35	24
99204-ZE2-0400	D15	35	24

3

PART NAME INDEX

G 1

Part name	Address	Page	Ref.
[A]			
ALERT UNIT, OIL	D13	33	5
ARM, GOVERNOR	E6	42	3
ARM, VALVE ROCKER	D7	27	4
[B]			
BARREL ASSY., CYLINDER	D2	22	1
BASE COMP., CONTROL	E6	42	12
BEARING, RADIAL BALL	D2	22	12
BEARING, RADIAL BALL, 6205	D2	22	12
	D4	24	8
BOLT, 3X12	E10	46	3
BOLT, CONNECTING ROD	D6	26	5
BOLT, DRAIN PLUG	D2	22	8
BOLT, FLANGE, 6X12	D1	21	6
	D3	23	18
	D13	33	8
	E7	43	15
BOLT, FLANGE, 6X13	E2	38	7
BOLT, FLANGE, 6X16	D10	30	15
BOLT, FLANGE, 6X20	D13	33	9
	D16	36	11
	E1	37	10
BOLT, FLANGE, 6X25	D11	31	16
	D12	32	14
	E5	41	4
BOLT, FLANGE, 6X29	E3	39	6
BOLT, FLANGE, 6X34	E3	39	6
BOLT, FLANGE, 6X8	D13	33	11
BOLT, FLANGE, 8X32	D4	24	7
BOLT, FLANGE, 8X60	D1	21	10
BOLT, GOVERNOR ARM	E7	43	16
BOLT, HEX., 5/16"	E10	46	2
BOLT, PIVOT, 8MM	D7	27	15
BOLT, STUD, 6X112	D1	21	7
BOLT, STUD, 8X32	D1	21	8
[C]			
CAMSHAFT ASSY.	D7	27	2
			17
			18
CAP ASSY., NOISE SUPPRESSOR	E5	41	2
CAP ASSY., OIL FILLER	D4	24	2
			3
CAP COMP., FUEL FILLER	E3	39	4
CAP, CLEANER	E1	37	7
CARBURETOR ASSY.	D14	34	9
CASE, RECOIL STARTER	D10	30	2
	D11	31	3
	D12	32	3
CHAMBER SET, FLOAT	D14	34	4
CHOKE SET	D14	34	8
CIRCLIP, 5MM	E7	43	24
CLIP, GOVERNOR HOLDER	D2	22	11
CLIP, HARNESS	D13	33	10
CLIP, PISTON PIN, 18MM	D6	26	6
CLIP, TUBE	E3	39	10
COIL ASSY., IGNITION	E5	41	1
COLLAR B, AIR CLEANER	D16	36	7
	E1	37	5
COLLAR, AIR CLEANER	D16	36	6
	E1	37	4
COLLAR, RECOIL STARTER	D10	30	3
	D11	31	5
	D12	32	4
CONTROL ASSY.	E6	42	1
			2
	E7	43	21
			22
CORD, STOP SWITCH	E5	41	3
COVER ASSY., CRANKCASE	D4	24	1
			9
COVER COMP., FAN	D13	33	1
COVER COMP., HEAD	D1	21	3
COVER, AIR CLEANER	D16	36	4
	E1	37	3
CRANKSHAFT COMP.	D5	25	1
			2
			3
			4
			5
			7
[D]			
DOWEL PIN, 10X16	D1	21	9
DOWEL PIN, 8X14	D4	24	6
[E]			
ELBOW COMP., AIR CLEANER	D16	36	8
	E1	37	6
ELEMENT, AIR CLEANER	D16	36	2
	E1	37	1
EMBLEM	E8	44	2
[F]			
FAN, COOLING	E4	40	2
FILTER, OUTER	D16	36	3
FLOAT SET	D14	34	3
FLYWHEEL COMP.	E4	40	4
[G]			
GASKET KIT	E11	47	1
GASKET SET	D14	34	1
GASKET, CYLINDER HEAD	D1	21	2
GASKET, MUFFLER	E2	38	3
GOVERNOR ASSY.	D2	22	2
	D3	23	19
GRID, AIR CLEANER	E1	37	2
GROMMET, AIR CLEANER	D16	36	5
GROMMET, DRAIN HOLE	D13	33	12
GUIDE, RATCHET	D10	30	7
GUIDE, RATCHET	D11	31	8
	D12	32	7
[H]			
HANDLE, BOX WRENCH	E9	45	2
HEAD COMP., CYLINDER	D1	21	1
HOLDER, CABLE	E6	42	10
HOLDER, WIRE	E7	43	23
[I]			
INSULATOR, CARBURETOR	D14	34	12
[J]			
JET SET, PILOT, #35	D15	35	24
JET SET, PILOT, #40	D15	35	24
JET, MAIN, #68	D15	35	23
JET, MAIN, #70	D15	35	23
JET, MAIN, #72	D15	35	23
JET, MAIN, #75	D15	35	23
JET, MAIN, #78	D15	35	23
JOINT, FUEL TANK	E3	39	2
[K]			
KEY, 4.78X4.78X38	D5	25	6
	D7	27	19
KEY, 5X5X33	D5	25	6
	D7	27	19
KEY, SPECIAL WOODRUFF, 25X18	E4	40	1
KNOB, RECOIL STARTER	D10	30	11
	D11	31	12
	D12	32	11
[L]			
LABEL, CAUTION	E8	44	3
LABEL, WARNING	E8	44	1
LEVER COMP., CHOKE	D15	35	16
LEVER, COCK	D15	35	17
LEVER, CONTROL	E6	42	7
LIFTER, VALVE	D7	27	5
[M]			
MARK A, COMBINATION	E8	44	3
MARK B, COMBINATION	E8	44	8
MARK, CHOKE	E8	44	4
MARK, OIL ALERT	E8	44	5
MARK, OPERATOR CAUTION	E8	44	3
			7
MARK, THROTTLE INDICATION	E8	44	6
MUFFLER COMP.	E2	38	1
			6

4

PART NAME INDEX

G 2

Part name	Address	Page	Ref.
[N]			
NOZZLE, MAIN	D14	34	11
NUT, FLANGE, 10MM	D2	22	15
NUT, FLANGE, 6MM	D16	36	10
	E1	37	9
	E3	39	8
	E7	43	20
NUT, HEX., 8MM	E2	38	5
NUT, PIVOT ADJUSTING	D7	27	16
NUT, SELF-LOCK, 6MM	E7	43	17
NUT, SPECIAL, 14MM	E4	40	5
NUT, TOOL BOX SETTING	D16	36	9
	E1	37	8
[O]			
OIL SEAL, 25X41X6	D2	22	13
	D4	24	5
O-RING, 14MM	D2	22	14
	E3	39	7
[P]			
PACKING, CARBURETOR	D14	34	15
	D15	35	15
PACKING, ELBOW	D16	36	1
PACKING, FUEL COCK	D15	35	20
PACKING, FUEL FILLER CAP	E3	39	5
PACKING, HEAD COVER	D1	21	4
PACKING, INSULATOR	D14	34	13
PACKING, OIL FILLER CAP	D4	24	4
PIN, GOVERNOR WEIGHT	D2	22	4
PIN, LOCK, 8MM	D2	22	17
PIN, PISTON	D6	26	3
PIN, SPRING, 2X12	D15	35	22
PISTON	D6	26	2
PIVOT, ROCKER ARM	D7	27	6
PLATE COMP., SIDE	D13	33	2
PLATE, LEVER SETTING	D15	35	18
PLATE, PUSH ROD GUIDE	D7	27	14
PLATE, SIDE	D13	33	3
PLUG, SPARK	D1	21	11
PROTECTOR COMP., MUFFLER	E2	38	2
PULLEY, STARTER	E4	40	3
[R]			
RATCHET, STARTER	D10	30	6
	D11	31	7
	D12	32	6
REEL, RECOIL STARTER	D10	30	5
	D11	31	6
	D12	32	5
RETAINER, EX. VALVE SPRING	D7	27	12
RETAINER, IN. VALVE SPRING	D7	27	11
RING SET, PISTON	D6	26	1
ROD ASSY., CONNECTING	D6	26	4
ROD, GOVERNOR	E6	42	4
ROD, PUSH	D7	27	3
ROPE, RECOIL STARTER	D10	30	12
	D11	31	13
	D12	32	12
ROTATOR, VALVE	D7	27	13
RUBBER, SUPPORTER	E3	39	1
[S]			
SCREW SET	D14	34	7
SCREW SET, DRAIN	D14	34	6
SCREW SET, PILOT	D14	34	5
SCREW, PAN, 3X6	D15	35	21
SCREW, PAN, 4X6	E7	43	25
SCREW, PAN, 5X16	E7	43	18
SCREW, PAN, 5X25	E7	43	19
SCREW, PAN, 5X35	E7	43	26
SCREW, SETTING	D10	30	14
	D11	31	15
	D12	32	13
SCREW, TAPPING, 5X8	E2	38	4
SCREW, THROTTLE STOP	D14	34	10
SEAL, VALVE STEM	D7	27	1
SHAFT, GOVERNOR ARM	D2	22	6
SHROUD	D13	33	4
SLIDER, GOVERNOR	D2	22	5
SPACER COMP., CARBURETOR	D14	34	14
SPACER, CONTROL LEVER	E6	42	11
SPACER, RECOIL STARTER MOUNTING	D11	31	2
	D12	32	2
SPRING, CABLE RETURN	E7	43	14
SPRING, COCK LEVER	D15	35	19
SPRING, CONTROL ADJUSTING	E6	42	13
SPRING, FRICTION	D10	30	8
	D11	31	9
	D12	32	8
SPRING, GOVERNOR	E6	42	5
SPRING, LEVER	E6	42	8
SPRING, RECOIL STARTER	D10	30	9
	D11	31	10
	D12	32	9
SPRING, RETURN	D10	30	10
	D11	31	11
	D12	32	10
SPRING, THROTTLE RETURN	E6	42	6
SPRING, VALVE	D7	27	10
SPRING, WEIGHT RETURN	D7	27	7
STARTER ASSY., RECOIL	D10	30	1
	D11	31	1
	D12	32	1
SWITCH ASSY., ENGINE STOP	D13	33	6
			7
	E10	46	1
SWITCH ASSY., OIL LEVEL	D2	22	7
[T]			
TANK COMP., FUEL	E3	39	3
TUBE, BREATHER	D1	21	5
TUBE, FUEL, 4.5X140	E3	39	9
TUBE, FUEL, 4.5X145	E3	39	9
[V]			
VALVE SET, FLOAT	D14	34	2
	D15	35	25
VALVE, EX.	D7	27	9
VALVE, IN.	D7	27	8
[W]			
WASHER, 8MM	E10	46	4
WASHER, CONTROL LEVER	E6	42	9
WASHER, DRAIN PLUG, 10.2MM	D2	22	10
WASHER, PLAIN	D15	35	26
WASHER, PLAIN, 6MM	D2	22	16
WASHER, THRUST, 6MM	D2	22	9
WEIGHT, GOVERNOR	D2	22	3
WRENCH COMP., SPARK PLUG	E9	45	1

4

1 FOREWORD INDEX

2 ENGINE GROUP

3 PART NUMBER INDEX

4 PART NAME INDEX

HONDA

The Power of Dreams

E.2014.07

Published by Honda Motor Co., Ltd.
Printed in Japan